AMPG

ACCURATE
MANUFACTURED
PRODUCTS
GROUP

Screws and Bolts

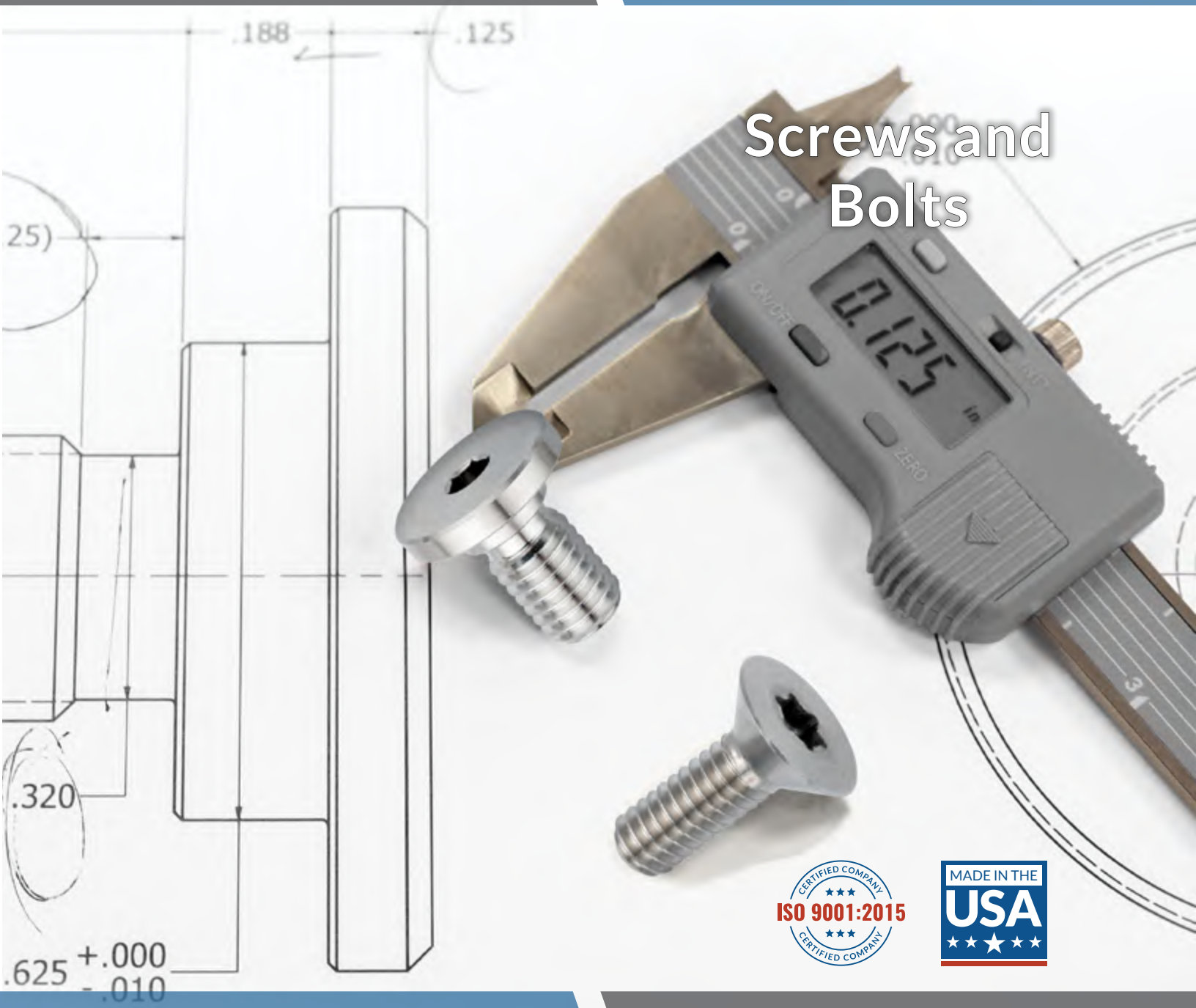

CERTIFIED COMPANY ISO 9001:2015 CERTIFIED COMPANY

MADE IN THE USA

CAT.Ver.15

Visit us online at ampg.com or email sales@ampg.com

8090 Woodland Drive
Indianapolis, IN 46278

p: 317.472.9000
f: 317.472.9010

"Beautiful Parts, Right Now"

Longevity

AMPG is a privately-owned family business started by current management in 1987. With the second generation in the business, already for many years, we are realizing a future of serving our customers, collaborating with our employees, and contributing to a vibrant domestic manufacturing economy.

Philosophy

We are proud to be an American manufacturer dedicated to solving large problems that affect small numbers of customers. We are committed to our team, our products, and our customers.

Our continuous capital investments in production equipment, employees, automation, and inspection technologies allows us to design thousands of new items a year, get them into large distributor channels and produce on demand small quantities in a few days.

Stock & Custom...*FAST*

As a precision manufacturer of specialized fasteners, architectural hardware, mechanical components and industrial accessories, AMPG stocks over 80,000 products. We also offer custom manufacturing supported by design, product testing and engineering services. To see the latest and most complete catalog of our over 80,000 different items, visit **www.ampg.com.**

How to Buy Our Products

Visit us **online**, email us at **sales@ampg.com** or give us a call at **317.472.9000** and we can help you with your inquiry. Our stock line of parts ships same day from Indianapolis, Indiana.

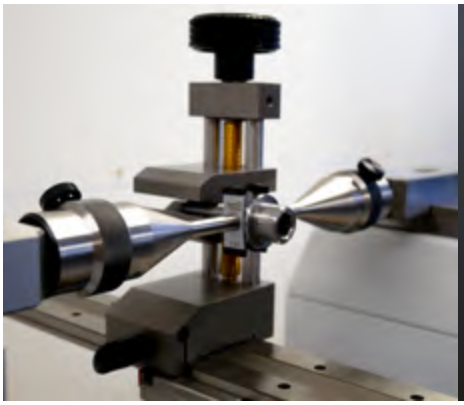

Index

Page	Description
i	About AMPG
ii - iii	AMPG Materials
C-1 to C-10	Socket Head Cap Screws
C-11 to C-13	Extra Long Length Socket Head Cap Screws
C-14 to C-22	Low Head Socket Head Cap Screws
C-23 to C-36	Ultra Low Head Socket Screws
C-37 to 41	Ultra Low Head Cap Screws
C-42	Extra Tall Socket Head Cap Screws
C-43	Square Drive Socket Head Cap Screws
C-44 to C-61	Captive Panel Screws
C-62 to C-63	82° Flat Head Socket Screws, Right and Left Hand Threads
C-64 to C-68	90° Flat Head Socket Screws
C-69 to C-70	82° Flat Head 6-Lobe Drive Screws
C-71 to C-75	100° Flat Head Socket Screws
C-76 to C-78	Wide Head Slotted Machine Screws
C-79 to C-80	Flanged Button Head Machine Screws
C-84 to C-83	Wide Flange Head Machine Screws
C-84 to C-88	External 6-Lobe Flange Screws
C-89 to C-125	Hex Head Cap Screws
C-126 to C-131	Flange Head Socket Cap Screws (Prairie Bolt™)
C-132 to C-160	Flange Hex Head Cap Screws (Prairie Bolt™)
C-161 to C-168	Button Socket Head Cap Screws
C-169 to C-170	6-Lobe Drive Button Head Machine Screws
C-171 to C-172	Left Hand Button Head Machine Screws
C-173	Fine Thread Button Head Machine Screws
C-174	Knurled Low Head Thumb Screws
C-175	Extra Length Thumb Screws
C-176	Dog Point Low Head Thumb Screws
C-177	Shoulder Knurled Thumb Screws with High Heads
C-178	Knurled Low Head Thumb Screws with Shoulders
C-179	Knurled-Type Thumb Screws with High Heads
C-179	Quarterturn Screws (Latch Bolts)
C-180	Knurled Narrow Head Thumb Screws
C-181	DIN 922 Pan Head Slot Screws with Full Dog Point
C-182	DIN 925 Flat Head Slot Screws with Full Dog Point
C-183	Non-Sparking Locking Bolts for Drum Ring
C-183	Hanger Bolts
C-183	Combo Phillips Pan Head Machine Screws with Pilot Points
C-184	Slotted Pan Head Machine Screws
C-185	T Slot Bolts

About AMPG

We Make Beautiful Parts, Right Now

AMPG (Accurate Manufactured Products Group) is a privately owned family business started by current management in 1987. Our 2nd generation is well experienced and active in the business and dedicated to keeping AMPG a closely held family firm.

We are Proud to be an American Manufacturer

AMPG is a Make to Stock Manufacturer of over 50,000 unique items. New products are our lifeblood, and we have a long term strategic plan in place to introduce thousands of new products each and every year.

Our 147,000 Sq Ft facility in Indianapolis supports low to medium volume manufacturing runs with over 70 late model and brand new CNC Lathes, Mills, and Thread Rolling equipment. AMPG has an aggressive investment program in the latest and most advanced Production, Automation, and Inspection equipment, as well as software and engineering systems to run our business as efficiently as possible.

ISO Certification to 9001:2015 was attained to anchor the culture of continual improvement both on and off the production floor. ISO 17065 Product Certification will be applied for in 2023, and ISO 17025 will be used to certify our in house Lab also in 2023. The latest in measuring, testing, and monitoring equipment is used to insure product quality and fast lead times. Lean principles guide the manufacturing process using robots, vision systems, and machine monitoring to enable continuous unmanned production around the clock.

Family Owned, Family Operated

AMPG began in Plainview, NY in 1987, and moved to Indianapolis, Indiana in 2004 in order to find the skilled machinists that are the foundation of our success. We are especially proud of our employee retention (as of 2022 all of our core team members will have over 15 years with the company), and the families second generation has over 18 years experience. We have a unique training method that allows us to grow our manufacturing capabilities to match our product and sales plan.

Our dedication to our employees is evidenced by their longevity and the numerous safety and healthiest employer awards we have won over the years.

Product Quality, Appearance and Quick Deliveries are Foundational Goals

AMPG makes and stocks hard-to-find fasteners, components, and fittings. We ship same day from our Indianapolis facility. We offer custom manufacturing capabilities including design, product testing, and engineering services. Our Made-to-Order program produces as little as one part within 7 days.

A Simple Philosophy

Provide a great customer experience by having beautiful, precise, and hard to find products ready to ship today.

AMPG ACCURATE MANUFACTURED PRODUCTS GROUP

CERTIFIED COMPANY ISO 9001:2015 CERTIFIED COMPANY

MADE IN THE USA

“All AMPG Screws and Bolts are Precision Made”

AMPG manufactures a wide variety of bolts and screws. For shoulder screws/shoulder bolts and screws compatible with binding barrels, please select ‘Shoulder Screws’, ‘Binding Machine Screws’ or ‘Binding Shoulder Screws’ product categories. AMPG manufactures a wide range of bolt & screw types and styles to choose. All AMPG manufactured products are made from DFARs compliant materials and are lot traceable to assure fastener quality. Our parts are precision machined from bar stock on programable Swiss CNC Lathes.

A Bolt or a Screw?

A simple question one would assume but for starters sometimes a screw is called a bolt and vice versa. The answer to this question has been controversial and varies between experts and organizations. Following are some basic definitions to help you search for bolt & screw products.

Machinery’s Handbook 26th Edition, © 2000 by Industrial Press Inc.

Differentiation between Bolt and Screw. – A bolt is an externally threaded fastener designed for insertion through holes in assembled parts and is normally intended to be tightened or released by torquing a nut. A screw is an externally threaded fastener capable of being inserted into holes in assembled parts, of mating with a preformed internal thread or forming its own thread and of being tightened or released by torquing the head. An externally threaded fastener which is prevented from being turned during assembly, and which can be tightened or released only by torquing a nut is a bolt. *(Example: round head bolts, track bolts, plow bolts.)*

An externally threaded fastener that has a thread form which prohibits assembly with a nut having a straight thread of multiple pitch length is a screw. *(Example: wood screws, tapping screws.)*

Some guidelines for choosing between the materials we produce are shown below.

Material Type	Specification	Tensile, psi	Yield, psi	Estimated Shear, psi	Elongation	Brinell Hardness	Rockwell Hardness
Aluminum 6061-T6	ASTM B211	45,000	40,000	22,500	17%	BHN 95	B56
Brass 360	ASTM B16	58,000	45,000	29,000	25%	BHN 143	B78
Nickel Alloy 405 *(Monel)*	ASTM B164	85,000	60,000	42,500	24%	BHN 163	B85
Stainless Steel 18-8 *(303)*	ASTM A582	90,000	35,000	45,000	50%	BHN 160	B83
Stainless Steel 316 *(316/316L)*	ASTM A276	75,000	30,000	37,500	45%	BHN 160	B83
Stainless Steel High Five® *(316 H5)*	ASTM A276	125,000	100,000	62,500	26%	BHN 250	C25
Stainless Steel 17-4 PH	Cond A ASTM A564 TYPE 630	160,000	145,000	80,000	15%	BHN 332	C36
Stainless Steel A286	ASTM A638 GR 660	160,000	120,000	80,000	27%	BHN 248	C24
Steel 12L14	ASTM A108	78,000	60,000	39,000	15%	BHN 160	B84
Steel Alloy C4140/41L40 *(Alloy)*	ASTM A108 Cold ASTM A108 Thru Hard	105,000 140,000	85,000 n/a	52,500 70,000	15% n/a	BHN 187 BHN 300	B91 C32
Steel Grade 2	ASTM A307 Equivalent	60,000	36,000	30,000	18%	BHN160	B70
Titanium Grade 2	ASTM B348 GR 2	75,000	55,000	37,500	20%	BHN 163	B85
Titanium Grade 5 *(6AL-4V)*	ASTM B348 GR 5	140,000	125,000	70,000	18%	BHN 296	C32

Note: Listed Mechanical Properties are obtained from various suppliers and is intended for comparison of materials, only. Values are based on raw material specifications. AMPG assumes no obligation and liability for the accuracy of this information. For critical applications, product testing may be appropriate.

AMPG 303, AMPG 316, AMPG 316H5, AMPG 174, AMPG 405, AMPG Ti2, AMPG 661, AMPG 360 are ® Registered Trademarks of AMPG (Accurate Manufactured Products Group) and may not be used or reproduced without our permission.

About Our Materials

Aluminum *Brass* *Stainless Steel* *Steel*

Aluminum

- Aluminum has the strength of mild steel with one third the weight.
- Resists corrosion in wet environments.
- Lightweight material used for fittings, hardware and fasteners.
- Nonmagnetic.

Brass

- Brass is a softer material approximately two-thirds copper and one-third zinc.
- Provides good resistance to rust and atmospheric corrosion.
- Friction-resistant material used for gears, bearings, fasteners and valves.
- Nonmagnetic.

Nickel Alloy 405 (Monel)

- Nickel (Monel) aka nickel-copper alloy is a higher-strength material.
- Excellent resistance in corrosive environments: sea water, some acids, alkalies.
- Marine industry material used for propellers, heat exchangers and valves.
- May be mildly magnetic.

Stainless Steel 18-8 (303)

- Type 303 stainless offers excellent corrosion resistance.
- Resists chemicals, most dyes, food and nitric acid.
- Corrosion-resistant material used for screws, bushings, nuts and hardware.
- May be mildly magnetic.

Stainless Steel 316 (316/316L)

- Type 316 stainless offers superior corrosion resistance than Type 303 stainless.
- Resists salt water, acids, chlorides, alkalis and other industrial solvents.
- Low-maintenance material used in commercial kitchens and food processing.
- May be mildly magnetic.

AMPG uses dual certified Type 316/316L stainless material. Meets all 316 stainless properties but has lower carbon content, making it more suitable for welding.

Stainless Steel High Five® (316H5)

- High Five® Stainless is AMPG's higher strength grade of 316 stainless steel.
- Resists salt water, acids, chlorides, alkalis and other industrial solvents.
- Corrosion-resistance material with strength equivalent to Grade 5 steel materials.
- May be mildly magnetic.

Stainless Steel 416

- Type 416 stainless can be hardened up to Maximum Rockwell C40 after heat treatment.
- Resists acids, alkalis, fresh water and dry air.
- Non-galling and hardenable material used for fittings, gears, shafts and screws.
- Magnetic.

Stainless Steel 17-4 PH

- Type 17-4 PH stainless maintains excellent corrosion resistance and strength at high temperatures.
- Resists chemicals, most dyes, food and nitric acid.
- High-strength material used for fittings, valves, bolts and shafts.
- Mildly magnetic.

Stainless Steel A286

- Type A286 stainless maintains superior corrosion resistance and strength at high temperatures, exceeding 17-4 PH performance.
- Resists salt water, acids, chlorides, alkalis and other industrial solvents.
- High-strength material used for fittings, valves, bolts and shafts. Used in high heat/stress applications such as jet engines, gas turbines, and super-charges.
- Nonmagnetic.

Steel Alloy 4140/41L40 (Alloy Steel)

- Alloy 4140 is a "primary" material used high strength fasteners and components.
- Material requires a finish to resist rust, such as black-oxide treatment or zinc plating.
- High-strength material that exceed Grade 8 used for socket screws, studs and components, only after heat treatment.
- Magnetic.

Titanium Gr 2

- Titanium Grade 2 is best known for being strong, lightweight and corrosion resistant.
- Resists chlorides, hypochlorites, chlorates, perchlorates and chlorine dioxide.
- Lightweight material used for chemical-processing equipment, heat exchangers and fasteners.
- Nonmagnetic.

Titanium Gr 5 (6AL-4V)

- Titanium Grade 5 is two times stronger than Grade 2, and four times stronger than 316 stainless at nearly half the weight.
- Resists chlorides, hypochlorites, chlorates, perchlorates and chlorine dioxide.
- Lightweight material used for higher-strength fasteners, racing components and marine hardware.
- Nonmagnetic.

Socket Head Cap Screws — Inch

MADE IN THE USA

17-4 PH SS, High Five SS (AMPG 316 H5),
Aluminum, Brass, Monel, Grade 2 Titanium, Grade 5 Titanium

Product Information

Socket heads are the standard for high-strength fastening. They can be installed in a counterbored hole or above the surface. 17-4 PH stainless steel maintains excellent corrosion resistance and strength at high temperatures. AMPG 316 H5 offers comparable strength and corrosion resistant properties as Bumax 88. AMPG is using a special grade of Type 316 Stainless Steel to manufacture the only domestic line of products that have the superior corrosion resistance of 316 stainless and the strength equivalent to Grade 5 steel materials. Our brass socket heads are excellent conductors of electricity. Brass screws are nonmagnetic and corrosion resistant. Monel (Nickel Copper)—Screws are more corrosion resistant than Type 316 and Bumax 88 stainless steel and resistant to salt water and some acids. Titanium screws have high strength-to-weight ratio and excellent corrosion resistance. Screws have a Class 3A thread fit. Length is measured under the head. All screws meet or exceed ASME B18.3-2003.

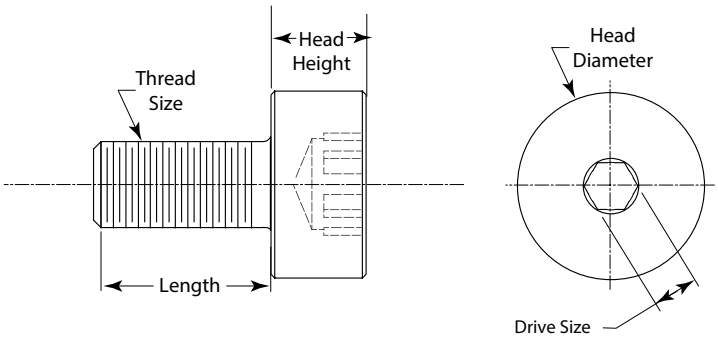

17-4 PH SS

316 H5 SS

Aluminum

Brass

Monel

Titanium Grade 2

Titanium Grade 5

Dimensions Table — Inch

Thread Size	Head Diameter	Head Height	Drive Size
0-80	.096	.060	.050
2-56	.140	.086	5/64
4-40	.183	.112	3/32
6-32	.226	.138	7/64
8-32	.270	.164	9/64
10-32	.312	.190	5/32
1/4-20	.375	.250	3/16
5/16-18	.468	.312	1/4
3/8-16	.562	.375	5/16
1/2-13	.750	.500	3/8

17-4 PH SS,
316 H5 SS

Socket Head Cap Screws — Inch

17-4 PH SS, High Five SS (AMPG 316 H5)

17-4 PH SS

316 H5 SS

2-56 Thread Size

Length	17-4 PH SS Part Number
1/8	ZS74402C02
3/16	ZS74402C03
1/4	ZS74402C04
5/16	ZS74402C05
3/8	ZS74402C06
1/2	ZS74402C08
3/16	ZS74404C03

4-40 Thread Size

Length	17-4 PH SS Part Number	316 H5 Part Number
1/4	ZS74404C04	ZSS61604C04
5/16	ZS74404C05	ZSS61604C05
3/8	ZS74404C06	ZSS61604C06
1/2	ZS74404C08	ZSS61604C08
5/8	ZS74404C10	—
3/4	ZS74404C12	—

6-32 Thread Size

Length	17-4 PH SS Part Number	316 H5 Part Number
1/4	ZS74406C04	ZSS61606C04
5/16	ZS74406C05	—
3/8	ZS74406C06	ZSS61606C06
1/2	ZS74406C08	ZSS61606C08
5/8	ZS74406C10	ZSS61606C10
3/4	ZS74406C12	ZSS61606C12
1	ZS74406C16	—

8-32 Thread Size

Length	17-4 PH SS Part Number	316 H5Part Number
1/4	ZS74408C04	—
3/8	ZS74408C06	ZSS61608C06
1/2	ZS74408C08	ZSS61608C08
5/8	ZS74408C10	ZSS61608C10
3/4	ZS74408C12	ZSS61608C12
1	ZS74408C16	ZSS61608C16
1-1/4	ZS74408C20	—

10-32 Thread Size

Length	17-4 PH SS Part Number	316 H5 Part Number
1/4	ZS74410F04	—
3/8	—	ZSS61610F06
1/2	—	ZSS61610F08
5/8	—	ZSS61610F10
3/4	—	ZSS61610F12
1	—	ZSS61610F16
1-1/4	ZS74410F20	—
1-1/2	ZS74410F24	—

1/4-20 Thread Size

Length	17-4 PH SS Part Number	316 H5 Part Number
3/8	ZS74414C06	—
1/2	ZS74414C08	ZSS61614C08
5/8	ZS74414C10	ZSS61614C10
3/4	ZS74414C12	ZSS61614C12
7/8	ZS74414C14	ZSS61614C14
1	ZS74414C16	ZSS61614C16
1-1/4	ZS74414C20	ZSS61614C20
1-1/2*	ZS74414C24	ZSS61614C24
1-3/4*	ZS74414C28	ZSS61614C28
2*	ZS74414C32	ZSS61614C32

*Partially threaded, 1" minimum

Chart continued on next page

AMPG ACCURATE MANUFACTURED PRODUCTS GROUP
CERTIFIED COMPANY ISO 9001:2015
MADE IN THE USA

Socket Head Cap Screws — Inch

17-4 PH SS, High Five SS (AMPG 316 H5)

17-4 PH SS

316 H5 SS

5/16-18 Thread Size

Length	17-4 PH SS Part Number	316 H5 Part Number
1/2	ZS74451C08	ZSS61651C08
5/8	ZS74451C10	ZSS61651C10
3/4	ZS74451C12	ZSS61651C12
7/8	ZS74451C14	ZSS61651C14
1	ZS74451C16	ZSS61651C16
1-1/4	ZS74451C20	ZSS61651C20
1-1/2*	ZS74451C24	ZSS61651C24
2	ZS74451C32	—
2-1/2**	ZS74451C40	—

*Partially threaded, 1-1/8" minimum

**Partially threaded, 2" minimum

3/8-16 Thread Size

Length	17-4 PH SS Part Number	316 H5 Part Number
3/4	ZS74438C12	ZSS61638C12
7/8	ZS74438C14	ZSS61638C14
1	ZS74438C16	ZSS61638C16
1-1/4	ZS74438C20	ZSS61638C20
1-1/2	ZS74438C24	ZSS61638C24
2	ZS74438C32	ZSS61638C32
2-1/2	ZS74438C40	—
3	ZS74438C48	—

1/2-13 Thread Size

Length	17-4 PH SS Part Number	316 H5 Part Number
1	ZS74412C16	ZSS61612C16
1-1/4	ZS74412C20	ZSS61612C20
1-1/2	ZS74412C24	ZSS61612C24
2	ZS74412C32	ZSS61612C32
2-3/4	ZS74412C44	—
3	ZS74412C48	—

Socket Head Cap Screws — Inch

Aluminum | Plain

2-56 Thread Size

Length	Aluminum Part Number
1/8	ZS72002C02
3/16	ZS72002C03
1/4	ZS72002C04
5/16	ZS72002C05
3/8	ZS72002C06
1/2	ZS72002C08
3/16	ZS72004C03

4-40 Thread Size

Length	Aluminum Part Number
1/4	ZS72004C04
5/16	ZS72004C05
3/8	ZS72004C06
1/2	ZS72004C08
5/8	ZS72004C10
3/4	ZS72004C12

6-32 Thread Size

Length	Aluminum Part Number
1/4	ZS72006C04
5/16	ZS72006C05
3/8	ZS72006C06
1/2	ZS72006C08
5/8	ZS72006C10
3/4	ZS72006C12
1	ZS72006C16

8-32 Thread Size

Length	Aluminum Part Number
1/4	ZS72008C04
3/8	ZS72008C06
1/2	ZS72008C08
5/8	ZS72008C10
3/4	ZS72008C12
1	ZS72008C16
1-1/4	ZS72008C20

10-32 Thread Size

Length	Aluminum Part Number
1/4	ZS72010F04
3/8	ZS72010F06
1/2	ZS72010F08
5/8	ZS72010F10
3/4	ZS72010F12
1	ZS72010F16
1-1/4	ZS72010F20
1-1/2	ZS72010F24

1/4-20 Thread Size

Length	Aluminum Part Number
3/8	ZS72014C06
1/2	ZS72014C08
5/8	ZS72014C10
3/4	ZS72014C12
7/8	ZS72014C14
1	ZS72014C16
1-1/4	ZS72014C20
1-1/2	ZS72014C24
1-3/4	ZS72014C28
2	ZS72014C32

5/16-18 Thread Size

Length	Aluminum Part Number
1/2	ZS72051C08
5/8	ZS72051C10
3/4	ZS72051C12
1	ZS72051C16
1-1/4	ZS72051C20
1-1/2	ZS72051C24
2	ZS72051C32

3/8-16 Thread Size

Length	Aluminum Part Number
3/4	ZS72038C12
1	ZS72038C16
1-1/4	ZS72038C20
1-1/2	ZS72038C24

Socket Head Cap Screws — Inch

Brass | Plain

Dimensions Table — Inch			
Thread Size	**Head Diameter**	**Head Height**	**Drive Size**
0-80	.096	.060	.050
2-56	.140	.086	5/64
4-40	.183	.112	3/32
10-32	.312	.190	5/32
3/8-16	9/16	3/8	5/16
1/2-13	3/4	1/2	3/8

0-80 Thread Size

Length	Brass Part Number
1/8	ZS55000C02
3/16	ZS55000C03
1/4	ZS55000C04

2-56 Thread Size

Length	Brass Part Number
1/2	ZS55002C08

4-40 Thread Size

Length	Brass Part Number
3/4	ZS55004C12
1	ZS55004C16

10-32 Thread Size

Length	Brass Part Number
1/4	ZS55010F04
5/16	ZS55010F05

3/8-16 Thread Size

Length	Brass Part Number
3	ZS55038C48

1/2-13 Thread Size

Length	Brass Part Number
1	ZS55012C16
1-1/4	ZS55012C20
1-1/2	ZS55012C24
2	ZS55012C32

Socket Head Cap Screws — Inch

Monel | Plain

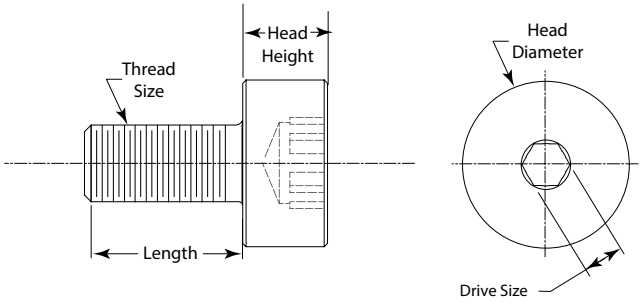

Dimensions Table — Inch			
Thread Size	**Head Diameter**	**Head Height**	**Drive Size**
2-56	.140	.086	5/64
4-40	.183	.112	3/32
6-32	.226	.138	7/64
8-32	.270	.164	9/64
10-32	.312	.190	5/32
1/4-20	.375	.250	3/16

2-56 Thread Size

Length	Monel Part Number
3/16	ZS71002C03
1/4	ZS71002C04
5/16	ZS71002C05
1/2	ZS71002C08

4-40 Thread Size

Length	Monel Part Number
1/4	ZS71004C04
5/16	ZS71004C05
3/8	ZS71004C06
1/2	ZS71004C08

6-32 Thread Size

Length	Monel Part Number
3/8	ZS71006C06
1/2	ZS71006C08
5/8	ZS71006C10
3/4	ZS71006C12

8-32 Thread Size

Length	Monel Part Number
3/8	ZS71008C06
1/2	ZS71008C08
5/8	ZS71008C10
3/4	ZS71008C12
1	ZS71008C16

10-32 Thread Size

Length	Monel Part Number
1/2	ZS71010F08
5/8	ZS71010F10
3/4	ZS71010F12
1	ZS71010F16

1/4-20 Thread Size

Length	Monel Part Number
3/8	ZS71014C06
1/2	ZS71014C08
5/8	ZS71014C10
3/4	ZS71014C12
1	ZS71014C16
1-1/4	ZS71014C20

Socket Head Cap Screws — Inch

Grade 2 Titanium | Plain
Grade 5 Titanium | Plain

Product Information

Socket heads are the standard for high-strength fastening. They can be installed in a counterbored hole or above the surface. Titanium Grade 2 is best known for being strong, lightweight, and corrosion resistant. Titanium Grade 5 is two times stronger than Grade 2, and four times stronger than 316 stainless at nearly half the weight. This material resists chlorides, hypochlorites, chlorates, perchlorates and chlorine dioxide. Screws may be mildy magnetic and have a Class 3A thread fit. Length is measured under the head. All screws meet or exceed ASME B18.3.

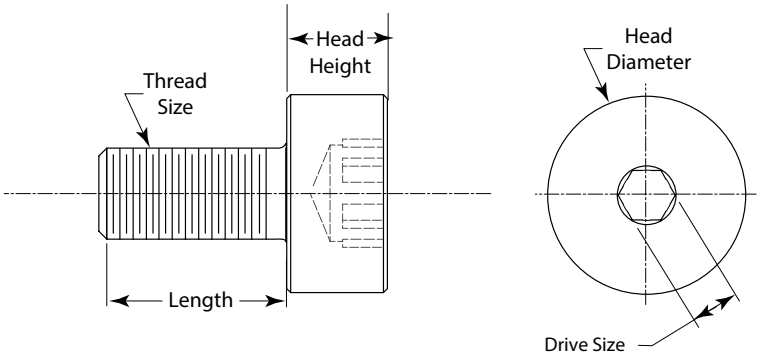

Dimensions Table — Inch

Thread Size	Head Diameter	Head Height	Drive Size
2-56	.140	.086	5/64
4-40	.183	.112	3/32
6-32	.226	.138	7/64
8-32	.270	.164	9/64
10-32	.312	.190	5/32
1/4-20	.375	.250	3/16
5/16-18	.468	.312	1/4
3/8-16	.562	.375	5/16
1/2-13	.750	.500	3/8

2-56 Thread Size

Length	Ti2 Part Number	Ti5 Part Number
1/8	ZS70502C02	ZS75502C02
3/16	ZS70502C03	ZS75502C03
1/4	ZS70502C04	ZS75502C04
5/16	ZS70502C05	ZS75502C05
3/8	ZS70502C06	ZS75502C06
1/2	ZS70502C08	ZS75502C08

4-40 Thread Size

Length	Ti2 Part Number	Ti5 Part Number
3/16	ZS70504C03	ZS75504C03
1/4	ZS70504C04	ZS75504C04
5/16	ZS70504C05	ZS75504C05
3/8	ZS70504C06	ZS75504C06
1/2	ZS70504C08	ZS75504C08
5/8	ZS70504C10	ZS75504C10
3/4	ZS70504C12	ZS75504C12
1*	ZS70504C16	ZS75504C16

*Partially threaded, 7/8" minimum

6-32 Thread Size

Length	Ti2 Part Number	Ti5 Part Number
1/4	ZS70506C04	ZS75506C04
5/16	ZS70506C05	ZS75506C05
3/8	ZS70506C06	ZS75506C06
1/2	ZS70506C08	ZS75506C08
5/8	ZS70506C10	ZS75506C10
3/4	ZS70506C12	ZS75506C12
1	ZS70506C16	ZS75506C16

Socket Head Cap Screws — Inch

Grade 2 Titanium | Plain
Grade 5 Titanium | Plain

Titanium Grade 2

Titanium Grade 5

8-32 Thread Size

Length	Ti2 Part Number	Ti5 Part Number
1/4	ZS70508C04	ZS75508C04
3/8	ZS70508C06	ZS75508C06
1/2	ZS70508C08	ZS75508C08
5/8	ZS70508C10	ZS75508C10
3/4	ZS70508C12	ZS75508C12
1	ZS70508C16	ZS75508C16
1-1/4	ZS70508C20	ZS75508C20

10-32 Thread Size

Length	Ti2 Part Number	Ti5 Part Number
1/4	ZS70510F04	ZS75510F04
3/8	ZS70510F06	ZS75510F06
1/2	ZS70510F08	ZS75510F08
5/8	ZS70510F10	ZS75510F10
3/4	ZS70510F12	ZS75510F12
1	ZS70510F16	ZS75510F16
1-1/4*	ZS70510F20	ZS75510F20
1-1/2*	ZS70510F24	ZS75510F24

*Partially threaded, 7/8" minimum

1/4-20 Thread Size

Length	Ti2 Part Number	Ti5 Part Number
3/8	ZS70514C06	ZS75514C06
1/2	ZS70514C08	ZS75514C08
5/8	ZS70514C10	ZS75514C10
3/4	ZS70514C12	ZS75514C12
7/8	ZS70514C14	ZS75514C14
1	ZS70514C16	ZS75514C16
1-1/4*	ZS70514C20	ZS75514C20
1-1/2*	ZS70514C24	ZS75514C24
2*	ZS70514C32	ZS75514C32

*Partially threaded, 7/8" minimum

5/16-18 Thread Size

Length	Ti2 Part Number	Ti5 Part Number
1/2	ZS70551C08	ZS75551C08
5/8	ZS70551C10	ZS75551C10
3/4	ZS70551C12	ZS75551C12
7/8	ZS70551C14	ZS75551C14
1	ZS70551C16	ZS75551C16
1-1/4	ZS70551C20	ZS75551C20
1-1/2*	ZS70551C24	ZS75551C24
2*	ZS70551C32	ZS75551C32

*Partially threaded, 1" minimum

3/8-16 Thread Size

Length	Ti2 Part Number	Ti5 Part Number
3/4	ZS70538C12	ZS75538C12
7/8	ZS70538C14	ZS75538C14
1	ZS70538C16	ZS75538C16
1-1/4	ZS70538C20	ZS75538C20
1-1/2	ZS70538C24	ZS75538C24

1/2-13 Thread Size

Length	Ti2 Part Number	Ti5 Part Number
1	ZS70512C16	ZS75512C16
1-1/4	ZS70512C20	ZS75512C20
1-1/2	ZS70512C24	ZS75512C24
2	ZS70512C32	ZS75512C32
3	ZS70512C48	ZS75512C48

Socket Cap Screws — Metric

17-4 PH SS, High Five SS (AMPG 316 H5), Titanium Grade 2, Titanium Grade 5, Brass

Product Information

Socket heads are the standard for high-strength fastening. They can be installed in a counterbored hole or above the surface. AMPG 316 H5 offers comparable strength and corrosion resistant properties as Bumax 88. AMPG is using a special grade of Type 316 Stainless Steel to manufacture the only domestic line of products that have the superior corrosion resistance of 316 stainless and the strength equivalent to Grade 5 steel materials. Use these fasteners in chemical, food, and marine applications. Maybe mildy magnetic. Screws have a Class 6g thread fit. Length is measured from under the head.

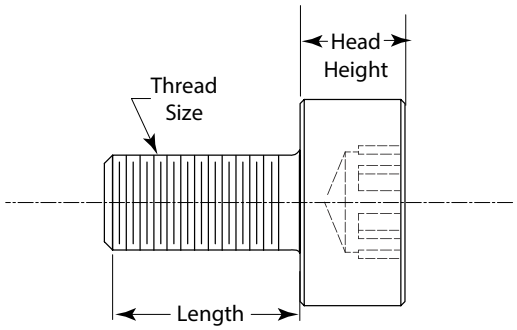

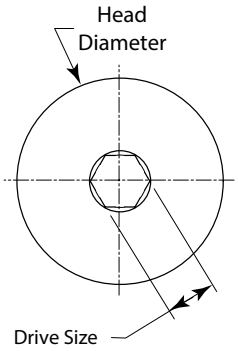

Dimensions Table — Metric, mm			
Thread Size	**Head Diameter**	**Head Height**	**Drive Size**
M2 x 0.4mm	3.80	2.00	1.5
M2.5 x 0.45mm	4.50	2.50	2
M3 x 0.5mm	5.50	3.00	2.5
M4 x 0.7mm	7.00	4.00	3
M5 x 0.8mm	8.50	5.00	4
M6 x 1mm	10.00	6.00	5
M8 x 1.25mm	13.00	8.00	6
M10 x 1.5mm	16.00	10.00	8
M12 x 1.75mm	18.00	12.00	10

Socket Head Cap Screws — Metric

17-4 PH SS | Plain
High Five SS (AMPG 316 H5) | Plain

M2 x 0.4mm Thread Size

Length	17-4 PH SS Part Number	316 H5 Part Number
6	ZS744M2X6	ZSS616M2X6
8	ZS744M2X8	ZSS616M2X8

M3 x 0.5mm Thread Size

Length	17-4 PH SS Part Number	316 H5 Part Number
6	ZS744M3X6	ZSS616M3X6
8	ZS744M3X8	ZSS616M3X8
10	ZS744M3X10	ZSS616M3X10
12	ZS744M3X12	ZSS616M3X12
14	ZS744M3X14	ZSS616M3X14
16	ZS744M3X16	ZSS616M3X16

M4 x 0.7mm Thread Size

Length	17-4 PH SS Part Number	316 H5 Part Number
8	ZS744M4X8	ZSS616M4X8
10	ZS744M4X10	ZSS616M4X10
12	ZS744M4X12	ZSS616M4X12
14	ZS744M4X14	ZSS616M4X14
16	ZS744M4X16	ZSS616M4X16
20	ZS744M4X20	ZSS616M4X20
25	ZS744M4X25	ZSS616M4X25
30*	ZS744M4X30	ZSS616M4X30

*Partially threaded, 20mm minimum

M5 x 0.8mm Thread Size

Length	17-4 PH SS Part Number	316 H5 Part Number
10	ZS744M5X10	ZSS616M5X10
12	ZS744M5X12	ZSS616M5X12
14	ZS744M5X14	ZSS616M5X14
16	ZS744M5X16	ZSS616M5X16
20	ZS744M5X20	ZSS616M5X20
25	ZS744M5X25	ZSS616M5X25

M6 x 1mm Thread Size

Length	17-4 PH SS Part Number	316 H5 Part Number
10	ZS744M6X10	ZSS616M6X10
12	ZS744M6X12	ZSS616M6X12
14	ZS744M6X14	ZSS616M6X14
16	ZS744M6X16	ZSS616M6X16
18	—	ZSS616M6X18
20	ZS744M6X20	ZSS616M6X20
25	ZS744M6X25	ZSS616M6X25
30	ZS744M6X30	ZSS616M6X30
35*	ZS744M6X35	ZSS616M6X35
40*	ZS744M6X40	ZSS616M6X40

*Partially threaded, 24mm minimum

M8 x 1.25mm Thread Size

Length	17-4 PH SS Part Number	316 H5 Part Number
12	—	ZSS616M8X12
16	—	ZSS616M8X16
18	—	ZSS616M8X18
20	ZS744M8X20	ZSS616M8X20
25	ZS744M8X25	ZSS616M8X25
30	ZS744M8X30	ZSS616M8X30

M10 x 1.5mm Thread Size

Length	316 H5 Part Number
18	ZSS616M10X18
20	ZSS616M10X20
25	ZSS616M10X25
30	ZSS616M10X30

M12 x 1.75mm Thread Size

Length	316 H5 Part Number
25	ZSS616M12X25
30	ZSS616M12X30
40	ZSS616M12X40
50	ZSS616M12X50

Socket Head Cap Screws — Metric

Grade 2 Titanium | Plain
Grade 5 Titanium | Plain

Titanium Grade 2

Titanium Grade 5

M2.5 x 0.45mm Thread Size

Length	Ti2 Part Number	Ti5 Part Number
4	ZS705M2.5X4	ZS755M2.5X4
5	ZS705M2.5X5	ZS755M2.5X5
6	ZS705M2.5X6	ZS755M2.5X6
8	ZS705M2.5X8	ZS755M2.5X8
10	ZS705M2.5X10	ZS755M2.5X10
12	ZS705M2.5X12	ZS755M2.5X12

M3 x 0.5mm Thread Size

Length	Ti2 Part Number	Ti5 Part Number
5	ZS705M3X5	ZS755M3X5
6	ZS705M3X6	ZS755M3X6
8	ZS705M3X8	ZS755M3X8
10	ZS705M3X10	ZS755M3X10
12	ZS705M3X12	ZS755M3X12
16	ZS705M3X16	ZS755M3X16
18	ZS705M3X18	ZS755M3X18
20	ZS705M3X20	ZS755M3X20

M4 x 0.7mm Thread Size

Length	Ti2 Part Number	Ti5 Part Number
6	ZS705M4X6	ZS755M4X6
10	ZS705M4X10	ZS755M4X10
12	ZS705M4X12	ZS755M4X12
16	ZS705M4X16	ZS755M4X16
18	ZS705M4X18	ZS755M4X18
20	ZS705M4X20	ZS755M4X20
25	ZS705M4X25	ZS755M4X25

M6 x 1mm Thread Size

Length	Ti2 Part Number	Ti5 Part Number
10	ZS705M6X10	ZS755M6X10
12	ZS705M6X12	ZS755M6X12
16	ZS705M6X16	ZS755M6X16
18	ZS705M6X18	ZS755M6X18
22	ZS705M6X22	ZS755M6X22
20	ZS705M6X20	ZS755M6X20
25	ZS705M6X25	ZS755M6X25
30	ZS705M6X30	ZS755M6X30
40*	ZS705M6X40	ZS755M6X40

*Partially threaded, 24mm minimum

M8 x 1.25mm Thread Size

Length	Ti2 Part Number	Ti5 Part Number
12	ZS705M8X12	ZS755M8X12
16	ZS705M8X16	ZS755M8X16
18	ZS705M8X18	ZS755M8X18
22	ZS705M8X22	ZS755M8X22
20	ZS705M8X20	ZS755M8X20
25	ZS705M8X25	ZS755M8X25
30	ZS705M8X30	ZS755M8X30
35	ZS705M8X35	ZS755M8X35

M5 x 0.8mm Thread Size

Length	Ti2 Part Number	Ti5 Part Number
6	ZS705M5X6	ZS755M5X6
10	ZS705M5X10	ZS755M5X10
12	ZS705M5X12	ZS755M5X12
16	ZS705M5X16	ZS755M5X16
18	ZS705M5X18	ZS755M5X18
20	ZS705M5X20	ZS755M5X20
25	ZS705M5X25	ZS755M5X25
30*	ZS705M5X30	ZS755M5X30

*Partially threaded, 22mm minimum

M10 x 1.5mm Thread Size

Length	Ti2 Part Number	Ti5 Part Number
18	ZS705M10X18	ZS755M10X18
22	ZS705M10X22	ZS755M10X22
20	ZS705M10X20	ZS755M10X20
25	ZS705M10X25	ZS755M10X25
30	ZS705M10X30	ZS755M10X30

M12 x 1.75mm Thread Size

Length	Ti2 Part Number	Ti5 Part Number
20	ZS705M12X20	ZS755M12X20
25	ZS705M12X25	ZS755M12X25
30	ZS705M12X30	ZS755M12X30
40	ZS705M12X40	ZS755M12X40
50	ZS705M12X50	ZS755M12X50

Socket Head Cap Screws — Metric

Brass | Plain

M2 x 0.4mm Thread Size

Length	Brass Part Number
6	ZS550M2X6
8	ZS550M2X8

M3 x 0.5mm Thread Size

Length	Brass Part Number
5	ZS550M3X5
6	ZS550M3X6
8	ZS550M3X8
10	ZS550M3X10
12	ZS550M3X12
16	ZS550M3X16
20	ZS550M3X20

M4 x 0.7mm Thread Size

Length	Brass Part Number
8	ZS550M4X8
10	ZS550M4X10
12	ZS550M4X12
14	ZS550M4X14
16	ZS550M4X16
20	ZS550M4X20
25	ZS550M4X25

M5 x 0.8mm Thread Size

Length	Brass Part Number
10	ZS550M5X10
12	ZS550M5X12
16	ZS550M5X16
20	ZS550M5X20
25	ZS550M5X25

M6 x 1mm Thread Size

Length	Brass Part Number
10	ZS550M6X10
12	ZS550M6X12
14	ZS550M6X14
16	ZS550M6X16
20	ZS550M6X20
25	ZS550M6X25
30	ZS550M6X30
35	ZS550M6X35

M8 x 1.25mm Thread Size

Length	Brass Part Number
16	ZS550M8X16
20	ZS550M8X20
25	ZS550M8X25
30	ZS550M8X30

Extra-Long Length Socket Head Cap Screws — Inch

18-8 SS | Plain
316 SS | Plain

Product Information

AMPG® Precision Machined Socket Head Cap Screws are dimensionally more precise. On state of the art CNC Swiss Lathes, parts are made without any extra-handling or other machining operations. This ensures concentricity, tight tolerances, and products easily recognized for their uniformity & function.

Socket head cap screws have heavy heads with a hex socket drive. All screws have a Class 3A thread fit. Screw length is measured from under the head and are Partially Threaded. Screws meet ASME B18.3 specifications.

Note: Longer lengths are available on special order. We can produce ultra long lengths up to 60" (1524mm) with our Swiss Lathes. Please contact sales@ampg.com.

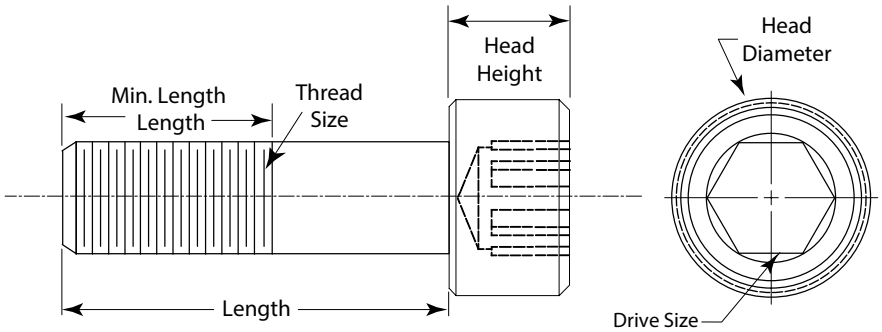

Dimensions Table — Inch				
Thread Size	**Minimum Thread Length**	**Head Diameter**	**Head Height**	**Drive Size**
1/4-20 **1/4-28**	1	.375	.250	3/16
5/16-18 **5/16-24**	1-1/8	.468	.312	1/4
3/8-16	1-1/4	.562	.375	5/16
7/16-14 **7/16-20**	1-3/8	.656	.437	3/8
1/2-13 **1/2-20**	1-1/2	.750	.500	3/8
9/16-12 **9/16-18**	1-1/2	.843	.562	7/16
5/8-11 **5/8-18**	1-3/4	.937	.625	1/2

Extra-Long Length Socket Head Cap Screws — Inch

18-8 SS | Plain
316 SS | Plain

1/4-20 Thread Size

Length	18-8 SS Part Number	316 SS Part Number
1-7/8*	ZS60114C30-1.38	—
2-1/4	ZS60114C36	ZS60214C36
4-1/2	ZS60114C72	ZS60214C72
5	ZS60114C80	ZS60214C80
5-1/2	ZS60114C88	ZS60214C88
6	ZS60114C96	ZS60214C96
6-1/2	ZS60114C104	ZS60214C104
7	ZS60114C112	ZS60214C112
7-1/2	ZS60114C120	ZS60214C120
8	ZS60114C128	ZS60214C128

** 1-3/8 min. thread*

1/4-28 Thread Size

Length	18-8 SS Part Number	316 SS Part Number
3-1/4	ZS60114F52-1.25	—
4-1/2	ZS60114F72	ZS60214F72
5	ZS60114F80	ZS60214F80
5-1/2	ZS60114F88	ZS60214F88
6	ZS60114F96	ZS60214F96
6-1/2	ZS60114F104	ZS60214F104
7	ZS60114F112	ZS60214F112
7-1/2	ZS60114F120	ZS60214F120
8	ZS60114F128	ZS60214F128

5/16-18 Thread Size

Length	18-8 SS Part Number	316 SS Part Number
4-1/2	ZS60151C72	ZS60251C72
5	ZS60151C80	ZS60251C80
5-1/2	ZS60151C88	ZS60251C88
6	ZS60151C96	ZS60251C96
6-1/2	ZS60151C104	ZS60251C104
7	ZS60151C112	ZS60251C112
7-1/2	ZS60151C120	ZS60251C120
8	ZS60151C128	ZS60251C128

5/16-24 Thread Size

Length	18-8 SS Part Number	316 SS Part Number
2*	ZS60151F32-1.375	—
4-1/2	ZS60151F72	ZS60251F72
5	ZS60151F80	ZS60251F80
5-1/2	ZS60151F88	ZS60251F88
6	ZS60151F96	ZS60251F96
6-1/2	ZS60151F104	ZS60251F104
7	ZS60151F112	ZS60251F112
7-1/2	ZS60151F120	ZS60251F120
8	ZS60151F128	ZS60251F128

** 1-3/8 min. thread*

3/8-16 Thread Size

Length	18-8 SS Part Number	316 SS Part Number
2	ZS60138C32	ZS60238C32
3*	ZS60138C48-1.50	—
4-1/2	ZS60138C72	ZS60238C72
5	ZS60138C80	ZS60238C80
5-1/2	ZS60138C88	ZS60238C88
6	ZS60138C96	ZS60238C96
6-1/2	ZS60138C104	ZS60238C104
7	ZS60138C112	ZS60238C112
7-1/2	ZS60138C120	ZS60238C120
8	ZS60138C128	ZS60238C128

** 1-1/2 min. thread*

3/8-24 Thread Size

Length	18-8 SS Part Number	316 SS Part Number
4-1/2	ZS60138F72	ZS60238F72
5	ZS60138F80	ZS60238F80
5-1/2	ZS60138F88	ZS60238F88
6	ZS60138F96	ZS60238F96
6-1/2	ZS60138F104	ZS60238F104
7	ZS60138F112	ZS60238F112
7-1/2	ZS60138F120	ZS60238F120
8	ZS60138F128	ZS60238F128

Chart continued on next page

Extra-Long Length Socket Head Cap Screws — Inch

18-8 SS | Plain
316 SS | Plain

7/16-14 Thread Size

Length	18-8 SS Part Number	316 SS Part Number
4-1/2	ZS60171C72	ZS60271C72
5	ZS60171C80	ZS60271C80
5-1/2	ZS60171C88	ZS60271C88
6	ZS60171C96	ZS60271C96
6-1/2	ZS60171C104	ZS60271C104
7	ZS60171C112	ZS60271C112
7-1/2	ZS60171C120	ZS60271C120
8	ZS60171C128	ZS60271C128

1/2-13 Thread Size

Length	18-8 SS Part Number	316 SS Part Number
4-1/2	ZS60112C72	ZS60212C72
5	ZS60112C80	ZS60212C80
5-1/2	ZS60112C88	ZS60212C88
6	ZS60112C96	ZS60212C96
6-1/2	ZS60112C104	ZS60212C104
7	ZS60112C112	ZS60212C112
7-1/2	ZS60112C120	ZS60212C120
8	ZS60112C128	ZS60212C128

5/8-11 Thread Size

Length	18-8 SS Part Number	316 SS Part Number
4-1/2	ZS60158C72	ZS60258C72
5	ZS60158C80	ZS60258C80
5-1/2	ZS60158C88	ZS60258C88
6	ZS60158C96	ZS60258C96
6-1/2	ZS60158C104	ZS60258C104
7	ZS60158C112	ZS60258C112
7-1/2	ZS60158C120	ZS60258C120
8	ZS60158C128	ZS60258C128

7/16-20 Thread Size

Length	18-8 SS Part Number	316 SS Part Number
2-1/2	ZS60171F40	ZS60271F40
3	ZS60171F48	ZS60271F48
3-1/2	ZS60171F56	ZS60271F56
4	ZS60171F64	ZS60271F64

9/16-18 Thread Size

Length	18-8 SS Part Number	316 SS Part Number
2-1/2	ZS60191F40	ZS60291F40
3	ZS60191F48	ZS60291F48
3-1/2	ZS60191F56	ZS60291F56
4	ZS60191F64	ZS60291F64

5/8-18 Thread Size

Length	18-8 SS Part Number	316 SS Part Number
4-1/2	ZS60158F72	ZS60258F72
5	ZS60158F80	ZS60258F80
5-1/2	ZS60158F88	ZS60258F88
6	ZS60158F96	ZS60258F96
6-1/2	ZS60158F104	ZS60258F104
7	ZS60158F112	ZS60258F112
7-1/2	ZS60158F120	ZS60258F120
8	ZS60158F128	ZS60258F128

1/2-20 Thread Size

Length	18-8 SS Part Number	316 SS Part Number
4-1/2	ZS60112F72	ZS60212F72
5	ZS60112F80	ZS60212F80
5-1/2	ZS60112F88	ZS60212F88
6	ZS60112F96	ZS60212F96
6-1/2	ZS60112F104	ZS60212F104
7	ZS60112F112	ZS60212F112
7-1/2	ZS60112F120	ZS60212F120
8	ZS60112F128	ZS60212F128

Low Head Socket Head Cap Screws — Inch

18-8 SS, 316 SS, Alloy Steel, 17-4 PH SS, Aluminum, Titanium Grade 2

Product Information

These Low Head Socket Head Cap Screws are excellent for tight areas as the low profile head is 30% lower than standard socket heads. Choose from Type 316 stainless steel for superior corrosion resistance, 17-4 precipitation hardened stainless steel alloy which combines the high strength of alloy steel with the corrosion resistance of stainless steel, Alumimum that provides the strength of mild steel with a third of the weight along with resistance to atmospheric corrosion, and Titanium used mostly for it's strength and resistant chemical enviroments. Alloy Steel screws have a black oxide plating that enhances appearances and cut down on light reflections and glare. All screws have a Class 3A thread fit. Screw length is measured from under the head. Note: The reduced head height and smaller socket size for low head screws are not recommended for high strength applications.

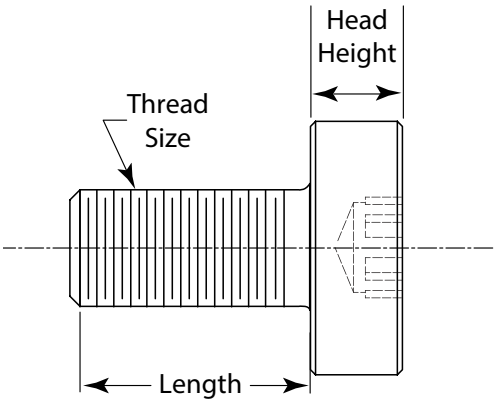

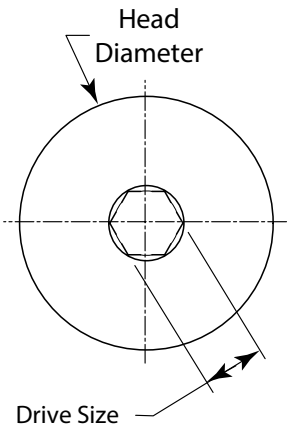

Dimensions Table — Inch			
Thread Size	**Head Diameter max. to min.**	**Head Height max. to min.**	**Drive Size**
2-56	.145 - .140	.043 - .040	.050
4-40	.183 - .178	.059 - .053	.050
6-32	.226 - .221	.072 - .066	1/16
8-32	.270 - .265	.085 - .079	5/64
10-24	.312 - .307	.098 - .092	3/32
10-32	.312 - .307	.098 - .092	3/32
1/4-20	.375 - .369	.127 - .121	1/8
1/4-28	.375 - .369	.127 - .121	1/8
7/16-14	.625 - .618	.223 - .213	7/32
5/16-18	.437 - .431	.158 - .125	5/32
5/16-24	.437 - .431	.158 - .125	5/32
3/8-16	.562 - .556	.192 - .182	3/16
3/8-24	.562 - .556	.192 - .182	3/16
1/2-13	.750 - .743	.254 - .244	1/4

18-8 SS

316 SS

Alloy Steel, Black Oxide

17-4 PH SS

Aluminum

Titanium

For technical drawings and charts, please see page C-14

Low Head Socket Head Cap Screws — Inch

18-8 SS, 316 SS, 17-4 PH SS, Aluminum, Titanium Grade 2

2-56 Thread Size

Length	Threading	18-8 SS Part Number	316 SS Part Number	Alloy Steel Part Number
3/16	Full Thread	ZL60102C03	ZL60202C03	ZL70002C03
1/4		ZL60102C04	ZL60202C04	ZL70002C04
5/16		ZL60102C05	ZL60202C05	ZL70002C05
3/8		ZL60102C06	ZL60202C06	ZL70002C06
1/2	Full Thread	ZL60102C08	ZL60202C08	ZL70002C08

4-40 Thread Size

Length	Threading	18-8 SS Part Number	316 SS Part Number	Alloy Steel Part Number
3/16	Full Thread	ZL60104C03	ZL60204C03	ZL70004C03
1/4		ZL60104C04	ZL60204C04	ZL70004C04
5/16		ZL60104C05	ZL60204C05	ZL70004C05
3/8		ZL60104C06	ZL60204C06	ZL70004C06
7/16	Full Thread	ZL60104C07	ZL60204C07	ZL70004C07
1/2		ZL60104C08	ZL60204C08	ZL70004C08
5/8		ZL60104C10	ZL60204C10	ZL70004C10
3/4		ZL60104C12	ZL60204C12	ZL70004C12
7/8		ZL60104C14	ZL60204C14	ZL70004C14
1	Full Thread	ZL60104C16	ZL60204C16	ZL70004C16

6-32 Thread Size

Length	Threading	18-8 SS Part Number	316 SS Part Number	Alloy Steel Part Number	17-4 PH SS Part Number	Aluminum Part Number	Titanium Part Number
3/16	Full Thread	ZL60106C03	ZL60206C03	ZL70006C03	—	—	—
1/4		ZL60106C04	ZL60206C04	ZL70006C04	ZL74406C04	ZL72006C04	ZL70506C04
5/16		ZL60106C05	ZL60206C05	ZL70006C05	—	—	—
3/8		ZL60106C06	ZL60206C06	ZL70006C06	ZL74406C06	ZL72006C06	ZL70506C06
7/16	Full Thread	ZL60106C07	ZL60206C07	ZL70006C07	—	—	—
1/2		ZL60106C08	ZL60206C08	ZL70006C08	ZL74406C08	ZL72006C08	ZL70506C08
5/8		ZL60106C10	ZL60206C10	ZL70006C10	—	—	—
3/4		ZL60106C12	ZL60206C12	ZL70006C12	ZL74406C12	ZL72006C12	ZL70506C12
1	Full Thread	ZL60106C16	ZL60206C16	ZL70006C16	—	—	—
1-1/4	Partial Thread .750" min.	ZL60106C20	ZL60206C20	ZL70006C20	—	—	—
1-3/8		ZL60106C22	ZL60206C22	ZL70006C22	—	—	—
1-1/2		ZL60106C24	ZL60206C24	ZL70006C24	—	—	—

Low Head Socket Head Cap Screws — Inch

18-8 SS, 316 SS, 17-4 PH SS, Aluminum, Titanium Grade 2

8-32 Thread Size

Length	Threading	18-8 SS Part Number	316 SS Part Number	Alloy Steel Part Number	17-4 PH SS Part Number	Aluminum Part Number	Titanium Part Number
3/16	Full Thread	ZL60108C03	ZL60208C03	ZL70008C03	—	—	—
1/4		ZL60108C04	ZL60208C04	ZL70008C04	ZL74408C04	ZL72008C04	ZL70508C04
5/16		ZL60108C05	ZL60208C05	ZL70008C05	—	—	—
3/8		ZL60108C06	ZL60208C06	ZL70008C06	ZL74408C06	ZL72008C06	ZL70508C06
7/16	Full Thread	ZL60108C07	ZL60208C07	ZL70008C07	—	—	—
1/2		ZL60108C08	ZL60208C08	ZL70008C08	ZL74408C08	ZL72008C08	ZL70508C08
5/8		ZL60108C10	ZL60208C10	ZL70008C10	—	—	—
3/4		ZL60108C12	ZL60208C12	ZL70008C12	ZL74408C12	ZL72008C12	ZL70508C12
7/8	Full Thread	ZL60108C14	ZL60208C14	ZL70008C14	—	—	—
1		ZL60108C16	ZL60208C16	ZL70008C16	—	—	—
1-1/4	Partial Thread .875" min.	ZL60108C20	ZL60208C20	ZL70008C20	—	—	—
1-3/8		ZL60108C22	ZL60208C22	ZL70008C22	—	—	—
1-1/2		ZL60108C24	ZL60208C24	ZL70008C24	—	—	—
1-5/8		ZL60108C26	ZL60208C26	ZL70008C26	—	—	—
1-3/4	Partial Thread .875" min.	ZL60108C28	ZL60208C28	ZL70008C28	—	—	—

10-24 Thread Size

Length	Threading	18-8 SS Part Number	316 SS Part Number	Alloy Steel Part Number
1/4	Full Thread	ZL60110C04	ZL60210C04	ZL70010C04
5/16		ZL60110C05	ZL60210C05	ZL70010C05
3/8		ZL60110C06	ZL60210C06	ZL70010C06
7/16		ZL60110C07	ZL60210C07	ZL70010C07
1/2	Full Thread	ZL60110C08	ZL60210C08	ZL70010C08
9/16		ZL60110C09	ZL60210C09	ZL70010C09
5/8		ZL60110C10	ZL60210C10	ZL70010C10
3/4		ZL60110C12	ZL60210C12	ZL70010C12
7/8	Full Thread	ZL60110C14	ZL60210C14	ZL70010C14
1		ZL60110C16	ZL60210C16	ZL70010C16
1-1/4	Partial Thread .875" min.	ZL60110C20	ZL60210C20	ZL70010C20
1-3/8		ZL60110C22	ZL60210C22	ZL70010C22
1-1/2		ZL60110C24	ZL60210C24	ZL70010C24
1-5/8		ZL60110C26	ZL60210C26	ZL70010C26
1-3/4	Partial Thread .875" min.	ZL60110C28	ZL60210C28	ZL70010C28
2		ZL60110C32	ZL60210C32	ZL70010C32

Chart continued on next page

Low Head Socket Head Cap Screws — Inch

18-8 SS, 316 SS, 17-4 PH SS, Aluminum, Titanium Grade 2

10-32 Thread Size

Length	Threading	18-8 SS Part Number	316 SS Part Number	Alloy Steel Part Number	17-4 PH SS Part Number	Aluminum Part Number	Titanium Part Number
1/4	Full Thread	ZL60110F04	ZL60210F04	ZL70010F04	—	—	—
5/16		ZL60110F05	ZL60210F05	ZL70010F05	—	—	—
3/8		ZL60110F06	ZL60210F06	ZL70010F06	ZL74410F06	ZL72010F06	ZL70510F06
7/16		ZL60110F07	ZL60210F07	ZL70010F07	—	—	—
1/2	Full Thread	ZL60110F08	ZL60210F08	ZL70010F08	ZL74410F08	ZL72010F08	ZL70510F08
9/16		ZL60110F09	ZL60210F09	ZL70010F09	—	—	—
5/8		ZL60110F10	ZL60210F10	ZL70010F10	—	—	—
3/4		ZL60110F12	ZL60210F12	ZL70010F12	ZL74410F12	ZL72010F12	ZL70510F12
7/8	Full Thread	ZL60114F14	ZL60214F14	ZL70014F14	—	—	—
1		ZL60110F16	ZL60210F16	ZL70010F16	ZL74410F16	ZL72010F16	ZL70510F16
1-1/4	Partial Thread .875" min.	ZL60110F20	ZL60210F20	ZL70010F20	—	—	—
1-3/8		ZL60110F22	ZL60210F22	ZL70010F22	—	—	—
1-1/2		ZL60110F24	ZL60210F24	ZL70010F24	—	—	—
1-5/8		ZL60110F26	ZL60210F26	ZL70010F26	—	—	—
1-3/4	Partial Thread .875" min.	ZL60110F28	ZL60210F28	ZL70010F28	—	—	—
2		ZL60110F32	ZL60210F32	ZL70010F32	—	—	—

1/4-20 Thread Size

Length	Threading	18-8 SS Part Number	316 SS Part Number	Alloy Steel Part Number	17-4 PH SS Part Number	Aluminum Part Number	Titanium Part Number
1/4	Full Thread	ZL60114C04	ZL60214C04	ZL70014C04	—	—	—
3/8		ZL60114C06	ZL60214C06	ZL70014C06	ZL74414C06	ZL72014C06	ZL70514C06
7/16		ZL60114C07	ZL60214C07	ZL70014C07	—	—	—
1/2		ZL60114C08	ZL60214C08	ZL70014C08	ZL74414C08	ZL72014C08	ZL70514C08
9/16	Full Thread	ZL60114C09	ZL60214C09	ZL70014C09	—	—	—
5/8		ZL60114C10	ZL60214C10	ZL70014C10	—	—	—
3/4		ZL60114C12	ZL60214C12	ZL70014C12	ZL74414C12	ZL72014C12	ZL70514C12
7/8		ZL60114C14	ZL60214C14	ZL70014C14	—	—	—
1	Full Thread	ZL60114C16	ZL60214C16	ZL70014C16	ZL74414C16	ZL72014C16	ZL70514C16
1-3/16		ZL60114C19	ZL60214C19	ZL70014C19	—	—	—
1-1/4		ZL60114C20	ZL60214C20	ZL70014C20	—	—	—
1-5/16		ZL60114C21	ZL60214C21	ZL70014C21	—	—	—
1-3/8	Full Thread	ZL60114C22	ZL60214C22	ZL70014C22	—	—	—
1-1/2	Partial Thread 1" min.	ZL60114C24	ZL60214C24	ZL70014C24	—	—	—
1-3/4		ZL60114C28	ZL60214C28	ZL70014C28	—	—	—
2		ZL60114C32	ZL60214C32	ZL70014C32	—	—	—
2-1/4		ZL60114C36	ZL60214C36	ZL70014C36	—	—	—
2-1/2	Partial Thread 1" min.	ZL60114C40	ZL60214C40	ZL70014C40	—	—	—
3		ZL60114C48	ZL60214C48	ZL70014C48	—	—	—

Low Head Socket Head Cap Screws — Inch

18-8 SS, 316 SS, 17-4 PH SS, Aluminum, Titanium Grade 2

1/4-28 Thread Size

Length	Threading	18-8 SS Part Number	316 SS Part Number	Alloy Steel Part Number
1/4	Full Thread	ZL60114F04	ZL60214F04	ZL70014F04
3/8		ZL60114F06	ZL60214F06	ZL70014F06
7/16		ZL60114F07	ZL60214F07	ZL70014F07
1/2		ZL60114F08	ZL60214F08	ZL70014F08
9/16	Full Thread	ZL60114F09	ZL60214F09	ZL70014F09
5/8		ZL60114F10	ZL60214F10	ZL70014F10
3/4		ZL60114F12	ZL60214F12	ZL70014F12
7/8		ZL60114F14	ZL60214F14	ZL70014F14
1	Full Thread	ZL60114F16	ZL60214F16	ZL70014F16
1-3/16		ZL60114F19	ZL60214F19	ZL70014F19
1-1/4		ZL60114F20	ZL60214F20	ZL70014F20
1-5/16		ZL60114F21	ZL60214F21	ZL70014F21
1-3/8	Full Thread	ZL60114F22	ZL60214F22	ZL70014F22
1-1/2	Partial Thread 1" min.	ZL60114F24	ZL60214F24	ZL70014F24
1-3/4		ZL60114F28	ZL60214F28	ZL70014F28
2		ZL60114F32	ZL60214F32	ZL70014F32
2-1/4		ZL60114F36	ZL60214F36	ZL70014F36
2-1/2		ZL60114F40	ZL60214F40	ZL70014F40

5/16-18 Thread Size

Length	Threading	18-8 SS Part Number	316 SS Part Number	Alloy Steel Part Number	17-4 PH SS Part Number	Aluminum Part Number	Titanium Part Number
1/4	Full Thread	ZL60151C04	ZL60251C04	ZL70051C04	—	—	—
5/16		ZL60151C05	ZL60251C05	ZL70051C05	—	—	—
3/8		ZL60151C06	ZL60251C06	ZL70051C06	—	—	—
1/2		ZL60151C08	ZL60251C08	ZL70051C08	ZL74451C08	ZL72051C08	ZL70551C08
5/8	Full Thread	ZL60151C10	ZL60251C10	ZL70051C10	—	—	—
3/4		ZL60151C12	ZL60251C12	ZL70051C12	ZL74451C12	ZL72051C12	ZL70551C12
1		ZL60151C16	ZL60251C16	ZL70051C16	ZL74451C16	ZL72051C16	ZL70551C16
1 1/4		ZL60151C20	ZL60251C20	ZL70051C20	ZL74451C20	ZL72051C20	ZL70551C20
1-1/2	Full Thread	ZL60151C24	ZL60251C24	ZL70051C24	ZL74451C24	ZL72051C24	ZL70551C24
1-3/4	Partial Thread 1.125" min.	ZL60151C28	ZL60251C28	ZL70051C28	—	—	—
2		ZL60151C32	ZL60251C32	ZL70051C32	—	—	—
2-1/2		ZL60151C40	ZL60251C40	ZL70051C40	—	—	—

Chart continued on next page

Low Head Socket Head Cap Screws — Inch

18-8 SS, 316 SS, 17-4 PH SS, Aluminum, Titanium Grade 2

5/16-24 Thread Size

Length	Threading	18-8 SS Part Number	316 SS Part Number	Alloy Steel Part Number
1/2	Full Thread	ZL60151F08	ZL60251F08	ZL70051F08
3/4		ZL60151F12	ZL60251F12	ZL70051F12
1		ZL60151F16	ZL60251F16	ZL70051F16

3/8-16 Thread Size

Length	Threading	18-8 SS Part Number	316 SS Part Number	Alloy Steel Part Number	17-4 PH SS Part Number	Aluminum Part Number	Titanium Part Number
1/4	Full Thread	ZL60138C04	ZL60238C04	ZL70038C04	—	—	—
5/16		ZL60138C05	ZL60238C05	ZL70038C05	—	—	—
3/8		ZL60138C06	ZL60238C06	ZL70038C06	—	—	—
1/2		ZL60138C08	ZL60238C08	ZL70038C08	ZL74438C08	ZL72038C08	ZL70538C08
5/8	Full Thread	ZL60138C10	ZL60238C10	ZL70038C10	—	—	—
3/4		ZL60138C12	ZL60238C12	ZL70038C12	—	—	—
7/8		ZL60138C14	ZL60238C14	ZL70038C14	ZL74438C12	ZL72038C12	ZL70538C12
1		ZL60138C16	ZL60238C16	ZL70038C16	ZL74438C16	ZL72038C16	ZL70538C16
1-1/4	Full Thread	ZL60138C20	ZL60238C20	ZL70038C20	—	—	—
1-1/2		ZL60138C24	ZL60238C24	ZL70038C24	ZL74438C24	ZL72038C24	ZL70538C24
1-3/4	Partial Thread 1.25" min.	ZL60138C28	ZL60238C28	ZL70038C28	—	—	—
2		ZL60138C32	ZL60238C32	ZL70038C32	ZL74438C32	ZL72038C32	ZL70538C32
2-1/2		ZL60138C40	ZL60238C40	ZL70038C40	—	—	—
3		ZL60138C48	ZL60238C48	ZL70038C48	—	—	—

3/8-24 Thread Size

Length	Threading	18-8 SS Part Number	316 SS Part Number	Alloy Steel Part Number
3/4	Full Thread	ZL60138F12	ZL60238F12	ZL70038F12
1		ZL60138F16	ZL60238F16	ZL70038F16

7/16-14 Thread Size

Length	Threading	18-8 SS Part Number	316 SS Part Number	Alloy Steel Part Number
3/8	Full Thread	ZL60171C06	ZL60271C06	ZL70071C06
1/2		ZL60171C08	ZL60271C08	ZL70071C08
5/8		ZL60171C10	ZL60271C10	ZL70071C10
3/4		ZL60171C12	ZL60271C12	ZL70071C12
1		ZL60171C16	ZL60271C16	ZL70071C16

1/2-13 Thread Size

Length	Threading	18-8 SS Part Number	316 SS Part Number	Alloy Steel Part Number
1/2	Full Thread	ZL60112C08	ZL60212C08	ZL70012C08
3/4		ZL60112C12	ZL60212C12	ZL70012C12
7/8		ZL60112C16	ZL60212C14	ZL70012C16
1		ZL60112C20	ZL60212C16	ZL70012C20
1-1/4	Full Thread	ZL60112C24	ZL60212C20	ZL70012C24
1-1/2		ZL60112C28	ZL60212C24	ZL70012C28
2		ZL60112C32	ZL60212C32	ZL70012C32
2-1/2		ZL60112C40	ZL60212C40	ZL70012C40
3	Partial Thread 1.250 " min.	ZL60112C48	ZL60212C48	ZL70012C48

Low Head Socket Head Cap Screws — Metric

18-8 SS, 316 SS, Alloy Steel | Black Oxide

Product Information

These Low Head Socket Head Cap Screws are excellent for tight areas as the low profile head is 30% lower than standard socket heads. Alloy Steel screws have a black oxide plating that enhances appearances and cut down on light reflections and glare. All screws have a Class 6g thread fit. Screw length is measured from under the head. Note: The reduced head height and smaller socket size for low head screws are not recommended for high strength applications.

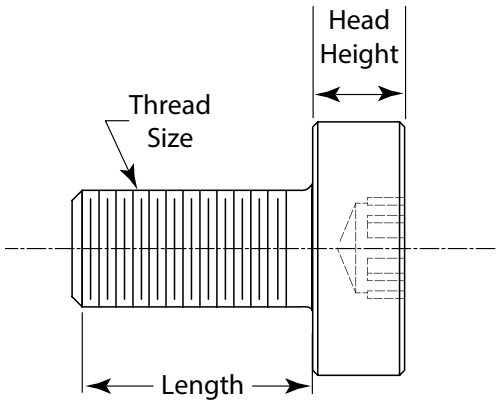

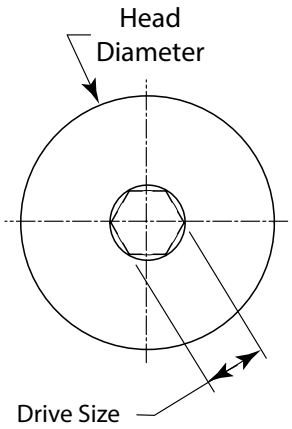

Dimensions Table — Metric

Thread Size	Head Diameter	Head Height	Drive Size
M2 × 0.4	3.80	1.35	1.3
M3 × 0.5	5.50	2.00	2
M4 × 0.7	7.00	2.80	2.5
M5 × 0.8	8.50	3.50	3
M6 × 1	10.00	4.00	4
M8 × 1.25	13.00	5.00	5
M10 × 1.5	16.00	6.00	7
M12 × 1.75	18.00	7.00	8

18-8 SS

316 SS

Alloy Steel, Black Oxide

M2 x 0.4 Thread Size

Length	Threading	18-8 SS Part Number	316 SS Part Number	Alloy Steel Part Number
4	Full Thread	ZL601M2X4	ZL602M2X4	ZL700M2X4
5		ZL601M2X5	ZL602M2X5	ZL700M2X5
6		ZL601M2X6	ZL602M2X6	ZL700M2X6
8		ZL601M2X8	ZL602M2X8	ZL700M2X8
10		ZL601M2X10	ZL602M2X10	ZL700M2X10

M3 x 0.5 Thread Size

Length	Threading	18-8 SS Part Number	316 SS Part Number	Alloy Steel Part Number
3	Full Thread	ZL601M3X3	ZL602M3X3	ZL700M3X3
4		ZL601M3X4	ZL602M3X4	ZL700M3X4
5		ZL601M3X5	ZL602M3X5	ZL700M3X5
6		ZL601M3X6	ZL602M3X6	ZL700M3X6
8	Full Thread	ZL601M3X8	ZL602M3X8	ZL700M3X8
10		ZL601M3X10	ZL602M3X10	ZL700M3X10
12		ZL601M3X12	ZL602M3X12	ZL700M3X12
14		ZL601M3X14	ZL602M3X14	ZL700M3X14
16	Full Thread	ZL601M3X16	ZL602M3X16	ZL700M3X16
20	Partial Thread 12mm min.	ZL601M3X20	ZL602M3X20	ZL700M3X20
25		ZL601M3X25	ZL602M3X25	ZL700M3X25
30		ZL601M3X30	ZL602M3X30	ZL700M3X30

Chart continued on next page

AMPG ACCURATE MANUFACTURED PRODUCTS GROUP
ISO 9001:2015
MADE IN THE USA

Low Head Socket Head Cap Screws — Metric

18-8 SS, 316 SS, Alloy Steel | Black Oxide

M4 x 0.7 Thread Size

Length	Threading	18-8 SS Part Number	316 SS Part Number	Alloy Steel Part Number
4	Full Thread	ZL601M4X4	ZL602M4X4	ZL700M4X4
5		ZL601M4X5	ZL602M4X5	ZL700M4X5
6		ZL601M4X6	ZL602M4X6	ZL700M4X6
8		ZL601M4X8	ZL602M4X8	ZL700M4X8
10	Full Thread	ZL601M4X10	ZL602M4X10	ZL700M4X10
12		ZL601M4X12	ZL602M4X12	ZL700M4X12
14		ZL601M4X14	ZL602M4X14	ZL700M4X14
16		ZL601M4X16	ZL602M4X16	ZL700M4X16
20	Full Thread	ZL601M4X20	ZL602M4X20	ZL700M4X20
25	Partial Thread 14mm min.	ZL601M4X25	ZL602M4X25	ZL700M4X25
30		ZL601M4X30	ZL602M4X30	ZL700M4X30
35		ZL601M4X35	ZL602M4X35	ZL700M4X35
40		ZL601M4X40	ZL602M4X40	ZL700M4X40
50		ZL601M4X50	ZL602M4X50	ZL700M4X50

M5 x 0.8 Thread Size

Length	Threading	18-8 SS Part Number	316 SS Part Number	Alloy Steel Part Number
5	Full Thread	ZL601M5X5	ZL602M5X5	ZL700M5X5
6		ZL601M5X6	ZL602M5X6	ZL700M5X6
8		ZL601M5X8	ZL602M5X8	ZL700M5X8
10		ZL601M5X10	ZL602M5X10	ZL700M5X10
12	Full Thread	ZL601M5X12	ZL602M5X12	ZL700M5X12
14		ZL601M5X14	ZL602M5X14	ZL700M5X14
16		ZL601M5X16	ZL602M5X16	ZL700M5X16
20		ZL601M5X20	ZL602M5X20	ZL700M5X20
25	Full Thread	ZL601M5X25	ZL602M5X25	ZL700M5X25
30	Partial Thread 16mm min.	ZL601M5X30	ZL602M5X30	ZL700M5X30
35		ZL601M5X35	ZL602M5X35	ZL700M5X35
40		ZL601M5X40	ZL602M5X40	ZL700M5X40
50		ZL601M5X50	ZL602M5X50	ZL700M5X50
60		ZL601M5X60	ZL602M5X60	ZL700M5X60

M6 x 1 Thread Size

Length	Threading	18-8 SS Part Number	316 SS Part Number	Alloy Steel Part Number
6	Full Thread	ZL601M6X6	ZL602M6X6	ZL700M6X6
8		ZL601M6X8	ZL602M6X8	ZL700M6X8
10		ZL601M6X10	ZL602M6X10	ZL700M6X10
12		ZL601M6X12	ZL602M6X12	ZL700M6X12
14	Full Thread	ZL601M6X14	ZL602M6X14	ZL700M6X14
16		ZL601M6X16	ZL602M6X16	ZL700M6X16
18		ZL601M6X18	ZL602M6X18	ZL700M6X18
20		ZL601M6X20	ZL602M6X20	ZL700M6X20
22	Full Thread	ZL601M6X22	ZL602M6X22	ZL700M6X22
25		ZL601M6X25	ZL602M6X25	ZL700M6X25
30	Partial Thread 18mm min.	ZL601M6X30	ZL602M6X30	ZL700M6X30
35		ZL601M6X35	ZL602M6X35	ZL700M6X35
40		ZL601M6X40	ZL602M6X40	ZL700M6X40
45		ZL601M6X45	ZL602M6X45	ZL700M6X45
50	Partial Thread 18mm min.	ZL601M6X50	ZL602M6X50	ZL700M6X50
60		ZL601M6X60	ZL602M6X60	ZL700M6X60
70		ZL601M6X70	ZL602M6X70	ZL700M6X70

Chart continued on next page

Low Head Socket Head Cap Screws — Metric

18-8 SS, 316 SS, Alloy Steel | Black Oxide

M8 x 1.25 Thread Size

Length	Threading	18-8 SS Part Number	316 SS Part Number	Alloy Steel Part Number
8	Full Thread	ZL601M8X8	ZL602M8X8	ZL700M8X8
10		ZL601M8X10	ZL602M8X10	ZL700M8X10
12		ZL601M8X12	ZL602M8X12	ZL700M8X12
14		ZL601M8X14	ZL602M8X14	ZL700M8X14
16	Full Thread	ZL601M8X16	ZL602M8X16	ZL700M8X16
18		ZL601M8X18	ZL602M8X18	ZL700M8X18
20		ZL601M8X20	ZL602M8X20	ZL700M8X20
22		ZL601M8X22	ZL602M8X22	ZL700M8X22
25	Full Thread	ZL601M8X25	ZL602M8X25	ZL700M8X25
30		ZL601M8X30	ZL602M8X30	ZL700M8X30
35	Partial Thread 22mm min.	ZL601M8X35	ZL602M8X35	ZL700M8X35
40		ZL601M8X40	ZL602M8X40	ZL700M8X40
45		ZL601M8X45	ZL602M8X45	ZL700M8X45
50		ZL601M8X50	ZL602M8X50	ZL700M8X50
60	Partial Thread 22mm min.	ZL601M8X60	ZL602M8X60	ZL700M8X60
70		ZL601M8X70	ZL602M8X70	ZL700M8X70

M10 x 1.5 Thread Size

Length	Threading	18-8 SS Part Number	316 SS Part Number	Alloy Steel Part Number
16	Full Thread	ZL601M10X16	ZL602M10X16	ZL700M10X16
20		ZL601M10X20	ZL602M10X20	ZL700M10X20
25		ZL601M10X25	ZL602M10X25	ZL700M10X25
30		ZL601M10X30	ZL602M10X30	ZL700M10X30
35	Full Thread	ZL601M10X35	ZL602M10X35	ZL700M10X35
40	Partial Thread 26mm min.	ZL601M10X40	ZL602M10X40	ZL700M10X40
45		ZL601M10X45	ZL602M10X45	ZL700M10X45
50		ZL601M10X50	ZL602M10X50	ZL700M10X50
55		ZL601M10X55	ZL602M10X55	ZL700M10X55
60	Partial Thread 26mm min.	ZL601M10X60	ZL602M10X60	ZL700M10X60
80		ZL601M10X80	ZL602M10X80	ZL700M10X80

M12 x 1.75 Thread Size

Length	Threading	18-8 SS Part Number	316 SS Part Number	Alloy Steel Part Number
20	Full Thread	ZL601M12X20	ZL602M12X20	ZL700M12X20
25		ZL601M12X25	ZL602M12X25	ZL700M12X25
30		ZL601M12X30	ZL602M12X30	ZL700M12X30
35		ZL601M12X35	ZL602M12X35	ZL700M12X35
40	Partial Thread 30mm min.	ZL601M12X40	ZL602M12X40	ZL700M12X40
45		ZL601M12X45	ZL602M12X45	ZL700M12X45
50		ZL601M12X50	ZL602M12X50	ZL700M12X50
60		ZL601M12X60	ZL602M12X60	ZL700M12X60

Ultra Low Head Socket Cap Screws — Inch

18-8 SS, 316 SS, Brass

Product Information

Excellent for tight areas and fastening applications which will not accept a countersunk flat head screw. Ultra Low Head screws have reduced head heights about 1/3 less than the height of standard low head socket cap screws. A lower profile head reduces the chance of anything snagging on the head. In addition, all screw sizes are made with extra-wide heads that offer 33% more bearing surface and holding power than standard low head screws. The larger diameter head improves holding power especially when fastening lower strength materials. Screws have a Class 3A Thread Fit. All screws are fully threaded. Length is measured from under the shoulder. Low head screws are not recommended for high strength applications.

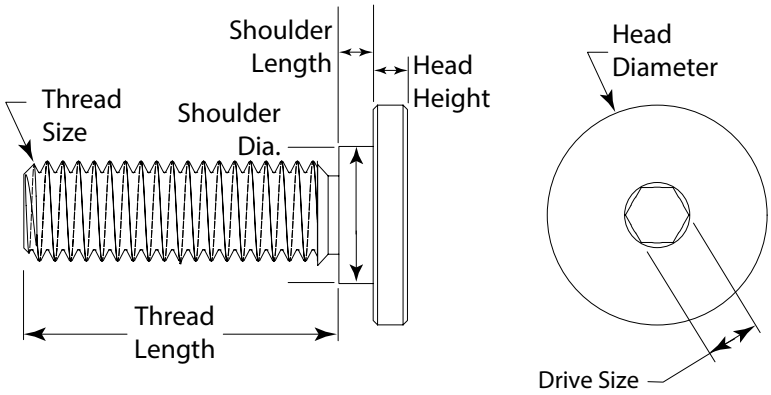

Dimensions Table — Inch					
Thread Size	**Head Diameter**	**Head Height**	**Shoulder Dia.**	**Shoulder Lg.**	**Socket Drive Size**
2-56	9/64	1/32	.094	.031	3/64
4-40	3/16	3/64	.139	.046	1/16
6-32	7/32	3/64	.139	.046	1/16
8-32	11/32	1/16	.188	.063	5/64
10-24	13/32	1/16	.250	.063	3/32
10-32	13/32	1/16	.250	.063	3/32
1/4-20	1/2	5/64	.313	.078	1/8
1/4-28	1/2	5/64	.313	.078	1/8
5/16-18	37/64	7/64	.375	.109	5/32
5/16-24	37/64	7/64	.375	.109	5/32
3/8-16	3/4	1/8	.438	.125	3/16
3/8-24	3/4	1/8	.438	.125	3/16
7/16-14	3/4	5/32	.500	.156	1/4
1/2-13	1	.165	.563	.165	1/4

18-8 SS

316 SS

Brass

Ultra Low Head Socket Cap Screws — Inch

18-8 SS, 316 SS

2-56 Thread Size

Length	Thread Spacing	18-8 SS Part Number	316 SS Part Number
3/16	Coarse	ZUL60102C03	ZUL60202C03
1/4	Coarse	ZUL60102C04	ZUL60202C04
5/16	Coarse	ZUL60102C05	ZUL60202C05
3/8	Coarse	ZUL60102C06	ZUL60202C06
7/16	Coarse	ZUL60102C07	ZUL60202C07
1/2	Coarse	ZUL60102C08	ZUL60202C08

4-40 Thread Size

Length	Thread Spacing	18-8 SS Part Number	316 SS Part Number
3/16	Coarse	ZUL60104C03	ZUL60204C03
1/4	Coarse	ZUL60104C04	ZUL60204C04
5/16	Coarse	ZUL60104C05	ZUL60204C05
3/8	Coarse	ZUL60104C06	ZUL60204C06
7/16	Coarse	ZUL60104C07	ZUL60204C07
1/2	Coarse	ZUL60104C08	ZUL60204C08
5/8	Coarse	ZUL60104C10	ZUL60204C10
3/4	Coarse	ZUL60104C12	ZUL60204C12
7/8	Coarse	ZUL60104C14	ZUL60204C14
1	Coarse	ZUL60104C16	ZUL60204C16

6-32 Thread Size

Length	Thread Spacing	18-8 SS Part Number	316 SS Part Number
3/16	Coarse	ZUL60106C03	ZUL60206C03
1/4	Coarse	ZUL60106C04	ZUL60206C04
5/16	Coarse	ZUL60106C05	ZUL60206C05
3/8	Coarse	ZUL60106C06	ZUL60206C06
7/16	Coarse	ZUL60106C07	ZUL60206C07
1/2	Coarse	ZUL60106C08	ZUL60206C08
5/8	Coarse	ZUL60106C10	ZUL60206C10
3/4	Coarse	ZUL60106C12	ZUL60206C12
7/8	Coarse	ZUL60106C14	ZUL60206C14
1	Coarse	ZUL60106C16	ZUL60206C16
1-1/4	Coarse	ZUL60106C20	ZUL60206C20
1-3/8	Coarse	ZUL60106C22	ZUL60206C22
1-1/2	Coarse	ZUL60106C24	ZUL60206C24

8-32 Thread Size

Length	Thread Spacing	18-8 SS Part Number	316 SS Part Number
3/16	Coarse	ZUL60108C03	ZUL60208C03
1/4	Coarse	ZUL60108C04	ZUL60208C04
5/16	Coarse	ZUL60108C05	ZUL60208C05
3/8	Coarse	ZUL60108C06	ZUL60208C06
7/16	Coarse	ZUL60108C07	ZUL60208C07
1/2	Coarse	ZUL60108C08	ZUL60208C08
5/8	Coarse	ZUL60108C10	ZUL60208C10
3/4	Coarse	ZUL60108C12	ZUL60208C12
7/8	Coarse	ZUL60108C14	ZUL60208C14
1	Coarse	ZUL60108C16	ZUL60208C16
1-1/4	Coarse	ZUL60108C20	ZUL60208C20
1-3/8	Coarse	ZUL60108C22	ZUL60208C22
1-1/2	Coarse	ZUL60108C24	ZUL60208C24
1-5/8	Coarse	ZUL60108C26	ZUL60208C26
1-3/4	Coarse	ZUL60108C28	ZUL60208C28

10-24 Thread Size

Length	Thread Spacing	18-8 SS Part Number	316 SS Part Number
1/4	Coarse	ZUL60110C04	ZUL60210C04
5/16	Coarse	ZUL60110C05	ZUL60210C05
3/8	Coarse	ZUL60110C06	ZUL60210C06
7/16	Coarse	ZUL60110C07	ZUL60210C07
1/2	Coarse	ZUL60110C08	ZUL60210C08
9/16	Coarse	ZUL60110C09	ZUL60210C09
5/8	Coarse	ZUL60110C10	ZUL60210C10
3/4	Coarse	ZUL60110C12	ZUL60210C12
7/8	Coarse	ZUL60110C14	ZUL60210C14
1	Coarse	ZUL60110C16	ZUL60210C16
1-1/4	Coarse	ZUL60110C20	ZUL60210C20
1-3/8	Coarse	ZUL60110C22	ZUL60210C22
1-1/2	Coarse	ZUL60110C24	ZUL60210C24
1-3/4	Coarse	ZUL60110C28	ZUL60210C28
2	Coarse	ZUL60110C32	ZUL60210C32

Chart continued on next page

Ultra Low Head Socket Cap Screws — Inch

18-8 SS, 316 SS

10-32 Thread Size

Length	Thread Spacing	18-8 SS Part Number	316 SS Part Number
1/4	Fine	ZUL60110F04	ZUL60210F04
5/16	Fine	ZUL60110F05	ZUL60210F05
3/8	Fine	ZUL60110F06	ZUL60210F06
7/16	Fine	ZUL60110F07	ZUL60210F07
1/2	Fine	ZUL60110F08	ZUL60210F08
9/16	Fine	ZUL60110F09	ZUL60210F09
5/8	Fine	ZUL60110F10	ZUL60210F10
3/4	Fine	ZUL60110F12	ZUL60210F12
7/8	Fine	ZUL60110F14	ZUL60210F14
1	Fine	ZUL60110F16	ZUL60210F16
1-1/4	Fine	ZUL60110F20	ZUL60210F20
1-3/8	Fine	ZUL60110F22	ZUL60210F22
1-1/2	Fine	ZUL60110F24	ZUL60210F24
1-3/4	Fine	ZUL60110F28	ZUL60210F28
2	Fine	ZUL60110F32	ZUL60210F32

1/4-20 Thread Size

Length	Thread Spacing	18-8 SS Part Number	316 SS Part Number
1/4	Coarse	ZUL60114C04	ZUL60214C04
3/8	Coarse	ZUL60114C06	ZUL60214C06
7/16	Coarse	ZUL60114C07	ZUL60214C07
1/2	Coarse	ZUL60114C08	ZUL60214C08
9/16	Coarse	ZUL60114C09	ZUL60214C09
5/8	Coarse	ZUL60114C10	ZUL60214C10
3/4	Coarse	ZUL60114C12	ZUL60214C12
7/8	Coarse	ZUL60114C14	ZUL60214C14
1	Coarse	ZUL60114C16	ZUL60214C16
1-3/16	Coarse	ZUL60114C19	ZUL60214C19
1-1/4	Coarse	ZUL60114C20	ZUL60214C20
1-3/8	Coarse	ZUL60114C22	ZUL60214C22
1-1/2	Coarse	ZUL60114C24	ZUL60214C24
1-3/4	Coarse	ZUL60114C28	ZUL60214C28
2	Coarse	ZUL60114C32	ZUL60214C32
2-1/4	Coarse	ZUL60114C36	ZUL60214C36
2-1/2	Coarse	ZUL60114C40	ZUL60214C40
3	Coarse	ZUL60114C48	ZUL60214C48

1/4-28 Thread Size

Length	Thread Spacing	18-8 SS Part Number	316 SS Part Number
1/4	Fine	ZUL60114F04	ZUL60214F04
3/8	Fine	ZUL60114F06	ZUL60214F06
7/16	Fine	ZUL60114F07	ZUL60214F07
1/2	Fine	ZUL60114F08	ZUL60214F08
9/16	Fine	ZUL60114F09	ZUL60214F09
5/8	Fine	ZUL60114F10	ZUL60214F10
3/4	Fine	ZUL60114F12	ZUL60214F12
7/8	Fine	ZUL60114F14	ZUL60214F14
1	Fine	ZUL60114F16	ZUL60214F16
1-1/4	Fine	ZUL60114F20	ZUL60214F20
1-3/8	Fine	ZUL60114F22	ZUL60214F22
1-1/2	Fine	ZUL60114F24	ZUL60214F24
1-3/4	Fine	ZUL60114F28	ZUL60214F28
2	Fine	ZUL60114F32	ZUL60214F32
2-1/4	Fine	ZUL60114F36	ZUL60214F36
2-1/2	Fine	ZUL60114F40	ZUL60214F40
3	Fine	ZUL60114F48	ZUL60214F48

5/16-18 Thread Size

Length	Thread Spacing	18-8 SS Part Number	316 SS Part Number
1/4	Coarse	ZUL60151C04	ZUL60251C04
5/16	Coarse	ZUL60151C05	ZUL60251C05
3/8	Coarse	ZUL60151C06	ZUL60251C06
1/2	Coarse	ZUL60151C08	ZUL60251C08
5/8	Coarse	ZUL60151C10	ZUL60251C10
3/4	Coarse	ZUL60151C12	ZUL60251C12
7/8	Coarse	ZUL60151C14	ZUL60251C14
1	Coarse	ZUL60151C16	ZUL60251C16
1-1/4	Coarse	ZUL60151C20	ZUL60251C20
1-1/2	Coarse	ZUL60151C24	ZUL60251C24
1-3/4	Coarse	ZUL60151C28	ZUL60251C28
2	Coarse	ZUL60151C32	ZUL60251C32
2-1/2	Coarse	ZUL60151C40	ZUL60251C40
3	Coarse	ZUL60151C48	ZUL60251C48

Chart continued on next page

Ultra Low Head Socket Cap Screws — Inch

18-8 SS, 316 SS

5/16-24 Thread Size

Length	Thread Spacing	18-8 SS Part Number	316 SS Part Number
3/8	Fine	ZUL60151F06	ZUL60251F06
1/2	Fine	ZUL60151F08	ZUL60251F08
3/4	Fine	ZUL60151F12	ZUL60251F12
1	Fine	ZUL60151F16	ZUL60251F16
1-1/4	Fine	ZUL60151F20	ZUL60251F20
1-1/2	Fine	ZUL60151F24	ZUL60251F24

3/8-16 Thread Size

Length	Thread Spacing	18-8 SS Part Number	316 SS Part Number
1/4	Coarse	ZUL60138C04	ZUL60238C04
5/16	Coarse	ZUL60138C05	ZUL60238C05
3/8	Coarse	ZUL60138C06	ZUL60238C06
1/2	Coarse	ZUL60138C08	ZUL60238C08
5/8	Coarse	ZUL60138C10	ZUL60238C10
3/4	Coarse	ZUL60138C12	ZUL60238C12
7/8	Coarse	ZUL60138C14	ZUL60238C14
1	Coarse	ZUL60138C16	ZUL60238C16
1-1/4	Coarse	ZUL60138C20	ZUL60238C20
1-1/2	Coarse	ZUL60138C24	ZUL60238C24
1-3/4	Coarse	ZUL60138C28	ZUL60238C28
2	Coarse	ZUL60138C32	ZUL60238C32
2-1/2	Coarse	ZUL60138C40	ZUL60238C40
3	Coarse	ZUL60138C48	ZUL60238C48

3/8-24 Thread Size

Length	Thread Spacing	18-8 SS Part Number	316 SS Part Number
1/2	Fine	ZUL60138F8	ZUL60238F08
3/4	Fine	ZUL60138F12	ZUL60238F12
7/8	Fine	ZUL60138F14	ZUL60238F14
1	Fine	ZUL60138F16	ZUL60238F16

7/16-14 Thread Size

Length	Thread Spacing	18-8 SS Part Number	316 SS Part Number
1/2	Coarse	ZUL60171C08	ZUL60271C08
5/8	Coarse	ZUL60171C10	ZUL60271C10
3/4	Coarse	ZUL60171C12	ZUL60271C12
1	Coarse	ZUL60171C16	ZUL60271C16

1/2-13 Thread Size

Length	Thread Spacing	18-8 SS Part Number	316 SS Part Number
1/2	Coarse	ZUL60112C08	ZUL60212C08
3/4	Coarse	ZUL60112C12	ZUL60212C12
1	Coarse	ZUL60112C16	ZUL60212C16
1-1/4	Coarse	ZUL60112C20	ZUL60212C20
1-1/2	Coarse	ZUL60112C24	ZUL60212C24
1-3/4	Coarse	ZUL60112C28	ZUL60212C28
2	Coarse	ZUL60112C32	ZUL60212C32
2-1/2	Coarse	ZUL60112C40	ZUL60212C40
3	Coarse	ZUL60112C48	ZUL60212C48

Ultra Low Head Socket Cap Screws — Inch

Brass

1/4-20 Thread Size

Length	Thread Spacing	Brass Part Number
1/2	Coarse	ZUL55014C08

Ultra Low Head Slotted Cap Screws — Inch

316 SS

Product Information

Excellent for tight areas and fastening applications which will not accept a countersunk flat head screw. Ultra Low Head screws have reduced head heights about 1/3 less than the height of standard low head slotted cap screws. A lower profile head reduces the chance of anything snagging on the head. In addition, all screw sizes are made with extra-wide heads that offer 33% more bearing surface and holding power than standard low head screws. The larger diameter head improves holding power especially when fastening lower strength materials. Screws have a Class 3A Thread Fit. All screws are fully threaded. Length is measured from under the shoulder. Low head screws are not recommended for high strength applications.

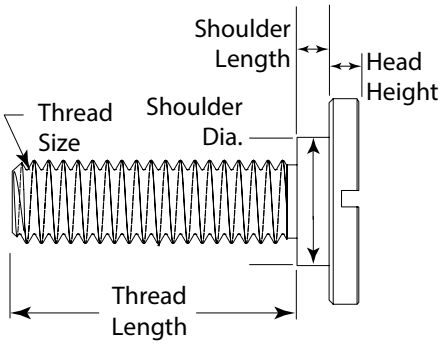

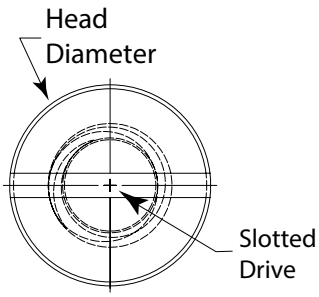

316 SS

Dimensions Table — Inch				
Thread Size	**Head Diameter**	**Head Height**	**Shoulder Dia.**	**Shoulder Lg.**
6-32	.226	.046	.139	.046
8-32	.270	.055	.166	.055
10-24	13/32	1/16	.250	.063
10-32	13/32	1/16	.250	.063
1/4-20	1/2	5/64	.313	.078
5/16-18	37/64	7/64	.375	.109
3/8-16	3/4	1/8	.438	.125
1/2-13	1	.165	.563	.165

Ultra Low Head Slotted Cap Screws — Inch

316 SS | Plain

6-32 Thread Size

Length	Thread Spacing	316 SS Part Number
1/4	Coarse	ZUL60406C04
3/8	Coarse	ZUL60406C06
1/2	Coarse	ZUL60406C08
5/8	Coarse	ZUL60406C10
3/4	Coarse	ZUL60406C12
1	Coarse	ZUL60406C16

8-32 Thread Size

Length	Thread Spacing	316 SS Part Number
1/4	Coarse	ZUL60408C04
5/16	Coarse	ZUL60408C05
3/8	Coarse	ZUL60408C06
1/2	Coarse	ZUL60408C08
5/8	Coarse	ZUL60408C10
3/4	Coarse	ZUL60408C12
1	Coarse	ZUL60408C16

10-24 Thread Size

Length	Thread Spacing	316 SS Part Number
3/8	Coarse	ZUL60410C06
1/2	Coarse	ZUL60410C08
5/8	Coarse	ZUL60410C10
3/4	Coarse	ZUL60410C12
1	Coarse	ZUL60410C16

10-32 Thread Size

Length	Thread Spacing	316 SS Part Number
1/4	Fine	ZUL60410F04
3/8	Fine	ZUL60410F06
1/2	Fine	ZUL60410F08
5/8	Fine	ZUL60410F10
3/4	Fine	ZUL60410F12
1	Fine	ZUL60410F16

1/4-20 Thread Size

Length	Thread Spacing	316 SS Part Number
1/4	Coarse	ZUL60414C04
3/8	Coarse	ZUL60414C06
1/2	Coarse	ZUL60414C08
5/8	Coarse	ZUL60414C10
3/4	Coarse	ZUL60414C12
7/8	Coarse	ZUL60414C14
1	Coarse	ZUL60414C16
1-1/4	Coarse	ZUL60414C20
1-1/2	Coarse	ZUL60414C24
1-3/4	Coarse	ZUL60414C28
2	Coarse	ZUL60414C32

5/16-18 Thread Size

Length	Thread Spacing	316 SS Part Number
3/8	Coarse	ZUL60451C06
1/2	Coarse	ZUL60451C08
3/4	Coarse	ZUL60451C12
1	Coarse	ZUL60451C16
1-1/4	Coarse	ZUL60451C20
1-1/2	Coarse	ZUL60451C24
1-3/4	Coarse	ZUL60451C28
2	Coarse	ZUL60451C32
2-1/2	Coarse	ZUL60451C40

3/8-16 Thread Size

Length	Thread Spacing	316 SS Part Number
3/8	Coarse	ZUL60438C06
1/2	Coarse	ZUL60438C08
3/4	Coarse	ZUL60438C12
1	Coarse	ZUL60438C16
1-1/4	Coarse	ZUL60438C20
1-1/2	Coarse	ZUL60438C24
1-3/4	Coarse	ZUL60438C28
2	Coarse	ZUL60438C32
2-1/2	Coarse	ZUL60438C40

1/2-13 Thread Size

Length	Thread Spacing	316 SS Part Number
1/2	Coarse	ZUL60412C08
3/4	Coarse	ZUL60412C12
1	Coarse	ZUL60412C16
1-1/2	Coarse	ZUL60412C24
2	Coarse	ZUL60412C32
2-1/2	Coarse	ZUL60412C40
3	Coarse	ZUL60412C48

Ultra Low Head Socket Cap Screws (no shoulder) — Inch

Alloy Steel | Black Oxide

Product Information

Excellent for tight areas and fastening applications which will not accept a countersunk flat head screw. Alloy Steel Ultra Low Head screws have reduced head heights about 1/3 less than the height of standard low head socket cap screws. A lower profile head reduces the chance of anything snagging on the head. In addition, all screw sizes are made with extra-wide heads that offer 33% more bearing surface and holding power than standard low head screws. The larger diameter head improves holding power especially when fastening lower strength materials. Screws have a Class 3A Thread Fit. All alloy steel screws are fully threaded and have no shoulder. Length is measured from under the head. Low head screws are not recommended for high strength applications.

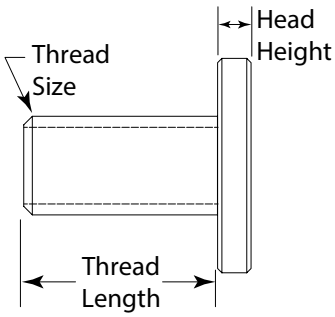

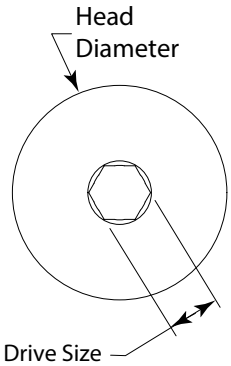

Alloy Steel, Black Oxide

Dimensions Table — Inch			
Thread Size	**Head Diameter**	**Head Height**	**Socket Drive Size**
2-56	9/64	1/32	.050
4-40	.183	.046	1/16
6-32	.226	.046	1/16
8-32	.270	.055	5/64
10-24	.312	.063	3/32
10-32	5/16	1/16	3/32
1/4-20	3/8	5/64	1/8
1/4-28	3/8	5/64	1/8
5/16-18	7/16	7/64	5/32
5/16-24	7/16	7/64	5/32
3/8-16	9/16	1/8	3/16
3/8-24	9/16	1/8	3/16
7/16-14	21/32	.146	1/4
1/2-13	3/4	.167	1/4

Ultra Low Head Socket Cap Screws (no shoulder) — Inch

Alloy Steel | Black Oxide

2-56 Thread Size

Length	Thread Spacing	Alloy Steel Part Number
3/16	Coarse	ZUL70002C03
1/4	Coarse	ZUL70002C04
5/16	Coarse	ZUL70002C05
3/8	Coarse	ZUL70002C06
7/16	Coarse	ZUL70002C07
1/2	Coarse	ZUL70002C08

4-40 Thread Size

Length	Thread Spacing	Alloy Steel Part Number
3/16	Coarse	ZUL70004C03
1/4	Coarse	ZUL70004C04
5/16	Coarse	ZUL70004C05
3/8	Coarse	ZUL70004C06
7/16	Coarse	ZUL70004C07
1/2	Coarse	ZUL70004C08
5/8	Coarse	ZUL70004C10
3/4	Coarse	ZUL70004C12
7/8	Coarse	ZUL70004C14
1	Coarse	ZUL70004C16

6-32 Thread Size

Length	Thread Spacing	Alloy Steel Part Number
3/16	Coarse	ZUL70006C03
1/4	Coarse	ZUL70006C04
5/16	Coarse	ZUL70006C05
3/8	Coarse	ZUL70006C06
7/16	Coarse	ZUL70006C07
1/2	Coarse	ZUL70006C08
5/8	Coarse	ZUL70006C10
3/4	Coarse	ZUL70006C12
7/8	Coarse	ZUL70006C14
1	Coarse	ZUL70006C16
1-1/4	Coarse	ZUL70006C20
1-3/8	Coarse	ZUL70006C22
1-1/2	Coarse	ZUL70006C24

8-32 Thread Size

Length	Thread Spacing	Alloy Steel Part Number
3/16	Coarse	ZUL70008C03
1/4	Coarse	ZUL70008C04
5/16	Coarse	ZUL70008C05
3/8	Coarse	ZUL70008C06
7/16	Coarse	ZUL70008C07
1/2	Coarse	ZUL70008C08
5/8	Coarse	ZUL70008C10
3/4	Coarse	ZUL70008C12
7/8	Coarse	ZUL70008C14
1	Coarse	ZUL70008C16
1-1/4	Coarse	ZUL70008C20
1-3/8	Coarse	ZUL70008C22
1-1/2	Coarse	ZUL70008C24
1-5/8	Coarse	ZUL70008C26
1-3/4	Coarse	ZUL70008C28

10-24 Thread Size

Length	Thread Spacing	Alloy Steel Part Number
1/4	Coarse	ZUL70010C04
5/16	Coarse	ZUL70010C05
3/8	Coarse	ZUL70010C06
7/16	Coarse	ZUL70010C07
1/2	Coarse	ZUL70010C08
9/16	Coarse	ZUL70010C09
5/8	Coarse	ZUL70010C10
3/4	Coarse	ZUL70010C12
7/8	Coarse	ZUL70010C14
1	Coarse	ZUL70010C16
1-1/4	Coarse	ZUL70010C20
1-3/8	Coarse	ZUL70010C22
1-1/2	Coarse	ZUL70010C24
1-3/4	Coarse	ZUL70010C28
1-5/8	Coarse	ZUL70010C26
2	Coarse	ZUL70010C32

Chart continued on next page

Ultra Low Head Socket Cap Screws (no shoulder) — Inch

Alloy Steel | Black Oxide

10-32 Thread Size

Length	Thread Spacing	Alloy Steel Part Number
1/4	Fine	ZUL70010F04
5/16	Fine	ZUL70010F05
3/8	Fine	ZUL70010F06
7/16	Fine	ZUL70010F07
1/2	Fine	ZUL70010F08
9/16	Fine	ZUL70010F09
5/8	Fine	ZUL70010F10
3/4	Fine	ZUL70010F12
7/8	Fine	ZUL70010F14
1	Fine	ZUL70010F16
1-1/4	Fine	ZUL70010F20
1-3/8	Fine	ZUL70010F22
1-1/2	Fine	ZUL70010F24
1-5/8	Fine	ZUL70010F26
1-3/4	Fine	ZUL70010F28
2	Fine	ZUL70010F32

1/4-20 Thread Size

Length	Thread Spacing	Alloy Steel Part Number
1/4	Coarse	ZUL70014C04
3/8	Coarse	ZUL70014C06
7/16	Coarse	ZUL70014C07
1/2	Coarse	ZUL70014C08
9/16	Coarse	ZUL70014C09
5/8	Coarse	ZUL70014C10
3/4	Coarse	ZUL70014C12
7/8	Coarse	ZUL70014C14
1	Coarse	ZUL70014C16
1-3/16	Coarse	ZUL70014C19
1-1/4	Coarse	ZUL70014C20
1-5/16	Coarse	ZUL70014C21
1-3/8	Coarse	ZUL70014C22
1-1/2	Coarse	ZUL70014C24
1-3/4	Coarse	ZUL70014C28
2	Coarse	ZUL70014C32
2-1/4	Coarse	ZUL70014C36
2-1/2	Coarse	ZUL70014C40
3	Coarse	ZUL70014C48

1/4-28 Thread Size

Length	Thread Spacing	Alloy Steel Part Number
1/4	Fine	ZUL70014F04
3/8	Fine	ZUL70014F06
7/16	Fine	ZUL70014F07
1/2	Fine	ZUL70014F08
9/16	Fine	ZUL70014F09
5/8	Fine	ZUL70014F10
3/4	Fine	ZUL70014F12
7/8	Fine	ZUL70014F14
1	Fine	ZUL70014F16
1-3/16	Fine	ZUL70014F19
1-1/4	Fine	ZUL70014F20
1-5/16	Fine	ZUL70014F21
1-3/8	Fine	ZUL70014F22
1-1/2	Fine	ZUL70014F24
1-3/4	Fine	ZUL70014F28
2	Fine	ZUL70014F32
2-1/4	Fine	ZUL70014F36
2-1/2	Fine	ZUL70014F40
3	Fine	ZUL70014F48

5/16-18 Thread Size

Length	Thread Spacing	Alloy Steel Part Number
1/4	Coarse	ZUL70051C04
5/16	Coarse	ZUL70051C05
3/8	Coarse	ZUL70051C06
1/2	Coarse	ZUL70051C08
5/8	Coarse	ZUL70051C10
3/4	Coarse	ZUL70051C12
7/8	Coarse	ZUL70051C14
1	Coarse	ZUL70051C16
1-1/4	Coarse	ZUL70051C20
1-1/2	Coarse	ZUL70051C24
1-3/4	Coarse	ZUL70051C28
2	Coarse	ZUL70051C32
2-1/2	Coarse	ZUL70051C40
3	Coarse	ZUL70051C48

Ultra Low Head Socket Cap Screws (no shoulder) — Inch

Alloy Steel | Black Oxide

5/16-24 Thread Size

Length	Thread Spacing	Alloy Steel Part Number
3/8	Fine	ZUL70051F06
1/2	Fine	ZUL70051F08
3/4	Fine	ZUL70051F12
1	Fine	ZUL70051F16
1-1/4	Fine	ZUL70051F20
1-1/2	Fine	ZUL70051F24

3/8-16 Thread Size

Length	Thread Spacing	Alloy Steel Part Number
1/4	Coarse	ZUL70038C04
5/16	Coarse	ZUL70038C05
3/8	Coarse	ZUL70038C06
1/2	Coarse	ZUL70038C08
5/8	Coarse	ZUL70038C10
3/4	Coarse	ZUL70038C12
7/8	Coarse	ZUL70038C14
1	Coarse	ZUL70038C16
1-1/4	Coarse	ZUL70038C20
1-1/2	Coarse	ZUL70038C24
1-3/4	Coarse	ZUL70038C28
2	Coarse	ZUL70038C32
2-1/2	Coarse	ZUL70038C40
3	Coarse	ZUL70038C48

3/8-24 Thread Size

Length	Thread Spacing	Alloy Steel Part Number
1/2	Fine	ZUL70038F08
3/4	Fine	ZUL70038F12
7/8	Fine	ZUL70038F14
1	Fine	ZUL70038F16

7/16-14 Thread Size

Length	Thread Spacing	Alloy Steel Part Number
3/8	Coarse	ZUL70071C06
1/2	Coarse	ZUL70071C08
5/8	Coarse	ZUL70071C10
3/4	Coarse	ZUL70071C12
1	Coarse	ZUL70071C16

1/2-13 Thread Size

Length	Thread Spacing	Alloy Steel Part Number
1/2	Coarse	ZUL70012C08
3/4	Coarse	ZUL70012C12
1	Coarse	ZUL70012C16
1-1/4	Coarse	ZUL70012C20
1-1/2	Coarse	ZUL70012C24
1-3/4	Coarse	ZUL70012C28
2	Coarse	ZUL70012C32
2-1/2	Coarse	ZUL70012C40
3	Coarse	ZUL70012C48

Ultra Low Head Socket Cap Screws — Metric

18-8 SS (A2), 316 SS (A4)

Product Information

Excellent for tight areas and fastening applications which will not accept a countersunk flat head screw. Ultra Low Head screws have reduced head heights about 1/3 less than the height of standard low head socket cap screws. A lower profile head reduces the chance of anything snagging on the head. In addition, all screw sizes are made with extra-wide heads that offer 33% more bearing surface and holding power than standard low head screws. The larger diameter head improves holding power especially when fastening lower strength materials. Screws have a Class 6g Thread Fit. All screws are fully threaded. Length is measured from under the shoulder. Low head screws are not recommended for high strength applications.

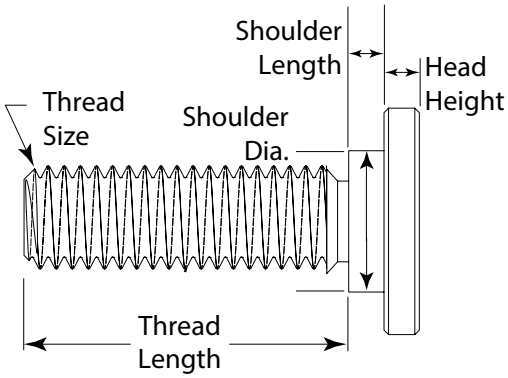

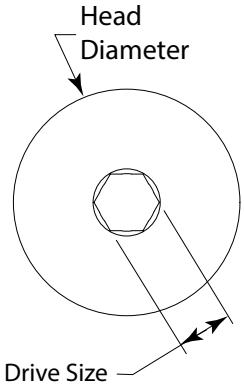

Dimensions Table — Metric					
Thread Size	**Head Diameter**	**Head Height**	**Shoulder Dia.**	**Shoulder Lg.**	**Drive Size**
M2 × 0.4mm	4.50	0.80	2.80	0.80	1.5
M2.5 × 0.45mm	4.50	0.80	2.80	0.80	1.5
M3 x 0.5mm	5.50	1.00	3.80	1.00	2
M3.5 × 0.6mm	6.00	1.00	4.00	1.00	2
M4 x 0.7mm	7.00	1.30	4.50	1.30	2.5
M5 x 0.8mm	8.50	1.70	5.20	1.70	3
M6 x 1mm	10.00	2.00	6.30	2.00	4
M7 x 1mm	12.00	2.70	8.50	2.70	4.5
M8 x 1.25mm	13.00	2.70	8.50	2.70	5
M10 x 1.5mm	16.00	3.30	11.00	3.30	7
M12 × 1.75mm	18.00	4.00	13.00	4.00	6
M14 × 2mm	21.00	4.50	14.50	4.50	6

Ultra Low Head Socket Cap Screws — Metric

18-8 SS (A2), 316 SS (A4)

M2 × 0.4 Thread Size

Length	Thread Spacing	18-8 SS Part Number	316 SS Part Number
3	Coarse	ZUL601M2X3	ZUL602M2X3
4	Coarse	ZUL601M2X4	ZUL602M2X4
5	Coarse	ZUL601M2X5	ZUL602M2X5
6	Coarse	ZUL601M2X6	ZUL602M2X6
8	Coarse	ZUL601M2X8	ZUL602M2X8
10	Coarse	ZUL601M2X10	ZUL602M2X10
12	Coarse	ZUL601M2X12	ZUL602M2X12

M2.5 × 0.45 Thread Size

Length	Thread Spacing	18-8 SS Part Number	316 SS Part Number
3	Coarse	ZUL601M2.5X3	ZUL602M2.5X3
4	Coarse	ZUL601M2.5X4	ZUL602M2.5X4
5	Coarse	ZUL601M2.5X5	ZUL602M2.5X5
6	Coarse	ZUL601M2.5X6	ZUL602M2.5X6
8	Coarse	ZUL601M2.5X8	ZUL602M2.5X8
10	Coarse	ZUL601M2.5X10	ZUL602M2.5X10
12	Coarse	ZUL601M2.5X12	ZUL602M2.5X12
14	Coarse	ZUL601M2.5X14	ZUL602M2.5X14
15	Coarse	ZUL601M2.5X15	ZUL602M2.5X15

M3 × 0.5 Thread Size

Length	Thread Spacing	18-8 SS Part Number	316 SS Part Number
3	Coarse	ZUL601M3X3	ZUL602M3X3
4	Coarse	ZUL601M3X4	ZUL602M3X4
5	Coarse	ZUL601M3X5	ZUL602M3X5
6	Coarse	ZUL601M3X6	ZUL602M3X6
7	Coarse	ZUL601M3X7	ZUL602M3X7
8	Coarse	ZUL601M3X8	ZUL602M3X8
10	Coarse	ZUL601M3X10	ZUL602M3X10
12	Coarse	ZUL601M3X12	ZUL602M3X12
14	Coarse	ZUL601M3X14	ZUL602M3X14
16	Coarse	ZUL601M3X16	ZUL602M3X16
20	Coarse	ZUL601M3X20	ZUL602M3X20
25	Coarse	ZUL601M3X25	ZUL602M3X25

M3.5 × 0.6 Thread Size

Length	Thread Spacing	18-8 SS Part Number	316 SS Part Number
5	Coarse	ZUL601M3.5X5	ZUL602M3.5X5
6	Coarse	ZUL601M3.5X6	ZUL602M3.5X6
8	Coarse	ZUL601M3.5X8	ZUL602M3.5X8
10	Coarse	ZUL601M3.5X10	ZUL602M3.5X10
12	Coarse	ZUL601M3.5X12	ZUL602M3.5X12
14	Coarse	ZUL601M3.5X14	ZUL602M3.5X14
16	Coarse	ZUL601M3.5X16	ZUL602M3.5X16
20	Coarse	ZUL601M3.5X20	ZUL602M3.5X20
25	Coarse	ZUL601M3.5X25	ZUL602M3.5X25

M4 × 0.7 Thread Size

Length	Thread Spacing	18-8 SS Part Number	316 SS Part Number
4	Coarse	ZUL601M4X4	ZUL602M4X4
5	Coarse	ZUL601M4X5	ZUL602M4X5
6	Coarse	ZUL601M4X6	ZUL602M4X6
8	Coarse	ZUL601M4X8	ZUL602M4X8
10	Coarse	ZUL601M4X10	ZUL602M4X10
12	Coarse	ZUL601M4X12	ZUL602M4X12
14	Coarse	ZUL601M4X14	ZUL602M4X14
16	Coarse	ZUL601M4X16	ZUL602M4X16
18	Coarse	ZUL601M4X18	ZUL602M4X18
20	Coarse	ZUL601M4X20	ZUL602M4X20
25	Coarse	ZUL601M4X25	ZUL602M4X25
30	Coarse	ZUL601M4X30	ZUL602M4X30
35	Coarse	ZUL601M4X35	ZUL602M4X35
40	Coarse	ZUL601M4X40	ZUL602M4X40
50	Coarse	ZUL601M4X50	ZUL602M4X50

Chart continued on next page

Ultra Low Head Socket Cap Screws — Metric

18-8 SS (A2), 316 SS (A4)

M5 × 0.8 Thread Size

Length	Thread Spacing	18-8 SS Part Number	316 SS Part Number
5	Coarse	ZUL601M5X5	ZUL602M5X5
6	Coarse	ZUL601M5X6	ZUL602M5X6
8	Coarse	ZUL601M5X8	ZUL602M5X8
10	Coarse	ZUL601M5X10	ZUL602M5X10
12	Coarse	ZUL601M5X12	ZUL602M5X12
14	Coarse	ZUL601M5X14	ZUL602M5X14
16	Coarse	ZUL601M5X16	ZUL602M5X16
18	Coarse	ZUL601M5X18	ZUL602M5X18
20	Coarse	ZUL601M5X20	ZUL602M5X20
25	Coarse	ZUL601M5X25	ZUL602M5X25
30	Coarse	ZUL601M5X30	ZUL602M5X30
35	Coarse	ZUL601M5X35	ZUL602M5X35
40	Coarse	ZUL601M5X40	ZUL602M5X40
50	Coarse	ZUL601M5X50	ZUL602M5X50

M6 × 1 Thread Size

Length	Thread Spacing	18-8 SS Part Number	316 SS Part Number
6	Coarse	ZUL601M6X6	ZUL602M6X6
8	Coarse	ZUL601M6X8	ZUL602M6X8
10	Coarse	ZUL601M6X10	ZUL602M6X10
12	Coarse	ZUL601M6X12	ZUL602M6X12
14	Coarse	ZUL601M6X14	ZUL602M6X14
16	Coarse	ZUL601M6X16	ZUL602M6X16
18	Coarse	ZUL601M6X18	ZUL602M6X18
20	Coarse	ZUL601M6X20	ZUL602M6X20
25	Coarse	ZUL601M6X25	ZUL602M6X25
30	Coarse	ZUL601M6X30	ZUL602M6X30
35	Coarse	ZUL601M6X35	ZUL602M6X35
40	Coarse	ZUL601M6X40	ZUL602M6X40
45	Coarse	ZUL601M6X45	ZUL602M6X45
50	Coarse	ZUL601M6X50	ZUL602M6X50
60	Coarse	ZUL601M6X60	ZUL602M6X60

M7 x 1 Thread Size

Length	Thread Spacing	18-8 SS Part Number	316 SS Part Number
10	Coarse	ZUL601M7X10	ZUL602M7X10
12	Coarse	ZUL601M7X12	ZUL602M7X12
14	Coarse	ZUL601M7X14	ZUL602M7X14
16	Coarse	ZUL601M7X16	ZUL602M7X16
18	Coarse	ZUL601M7X18	ZUL602M7X18
20	Coarse	ZUL601M7X20	ZUL602M7X20
25	Coarse	ZUL601M7X25	ZUL602M7X25

M8 × 1.25 Thread Size

Length	Thread Spacing	18-8 SS Part Number	316 SS Part Number
6	Coarse	ZUL601M8X6	ZUL602M8X6
8	Coarse	ZUL601M8X8	ZUL602M8X8
10	Coarse	ZUL601M8X10	ZUL602M8X10
12	Coarse	ZUL601M8X12	ZUL602M8X12
14	Coarse	ZUL601M8X14	ZUL602M8X14
16	Coarse	ZUL601M8X16	ZUL602M8X16
18	Coarse	ZUL601M8X18	ZUL602M8X18
20	Coarse	ZUL601M8X20	ZUL602M8X20
22	Coarse	ZUL601M8X22	ZUL602M8X22
25	Coarse	ZUL601M8X25	ZUL602M8X25
30	Coarse	ZUL601M8X30	ZUL602M8X30
35	Coarse	ZUL601M8X35	ZUL602M8X35
40	Coarse	ZUL601M8X40	ZUL602M8X40
45	Coarse	ZUL601M8X45	ZUL602M8X45
50	Coarse	ZUL601M8X50	ZUL602M8X50
55	Coarse	ZUL601M8X55	ZUL602M8X55
60	Coarse	ZUL601M8X60	ZUL602M8X60
70	Coarse	ZUL601M8X70	ZUL602M8X70

Chart continued on next page

Ultra Low Head Socket Cap Screws — Metric

18-8 SS (A2), 316 SS (A4)

M10 × 1.5 Thread Size

Length	Thread Spacing	18-8 SS Part Number	316 SS Part Number
10	Coarse	ZUL601M10X10	ZUL602M10X10
12	Coarse	ZUL601M10X12	ZUL602M10X12
14	Coarse	ZUL601M10X14	ZUL602M10X14
16	Coarse	ZUL601M10X16	ZUL602M10X16
20	Coarse	ZUL601M10X20	ZUL602M10X20
25	Coarse	ZUL601M10X25	ZUL602M10X25
30	Coarse	ZUL601M10X30	ZUL602M10X30
35	Coarse	ZUL601M10X35	ZUL602M10X35
40	Coarse	ZUL601M10X40	ZUL602M10X40
45	Coarse	ZUL601M10X45	ZUL602M10X45
50	Coarse	ZUL601M10X50	ZUL602M10X50
55	Coarse	ZUL601M10X55	ZUL602M10X55
60	Coarse	ZUL601M10X60	ZUL602M10X60
70	Coarse	ZUL601M10X70	ZUL602M10X70

M12 × 1.75 Thread Size

Length	Thread Spacing	18-8 SS Part Number	316 SS Part Number
10	Coarse	ZUL601M12X10	ZUL602M12X10
12	Coarse	ZUL601M12X12	ZUL602M12X12
14	Coarse	ZUL601M12X14	ZUL602M12X14
20	Coarse	ZUL601M12X20	ZUL602M12X20
25	Coarse	ZUL601M12X25	ZUL602M12X25
30	Coarse	ZUL601M12X30	ZUL602M12X30
35	Coarse	ZUL601M12X35	ZUL602M12X35
40	Coarse	ZUL601M12X40	ZUL602M12X40
45	Coarse	ZUL601M12X45	ZUL602M12X45
50	Coarse	ZUL601M12X50	ZUL602M12X50
60	Coarse	ZUL601M12X60	ZUL602M12X60

M14 × 2 Thread Size

Length	Thread Spacing	18-8 SS Part Number	316 SS Part Number
12	Coarse	ZUL601M14X12	ZUL602M14X12
14	Coarse	ZUL601M14X14	ZUL602M14X14
20	Coarse	ZUL601M14X20	ZUL602M14X20
25	Coarse	ZUL601M14X25	ZUL602M14X25
30	Coarse	ZUL601M14X30	ZUL602M14X30
40	Coarse	ZUL601M14X40	ZUL602M14X40
50	Coarse	ZUL601M14X50	ZUL602M14X50

Ultra Low Head Slotted Cap Screws — Metric

316 SS (A4)

Product Information

Excellent for tight areas and fastening applications which will not accept a countersunk flat head screw. Ultra Low Head screws have reduced head heights about 1/3 less than the height of standard low head slotted cap screws. A lower profile head reduces the chance of anything snagging on the head. In addition, all screw sizes are made with extra-wide heads that offer 33% more bearing surface and holding power than standard low head screws. The larger diameter head improves holding power especially when fastening lower strength materials. Screws have a Class 6g Thread Fit. All screws are fully threaded. Length is measured from under the shoulder. Low head screws are not recommended for high strength applications.

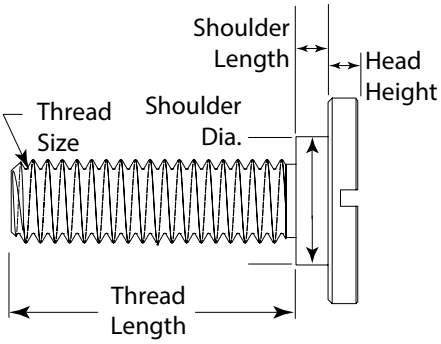

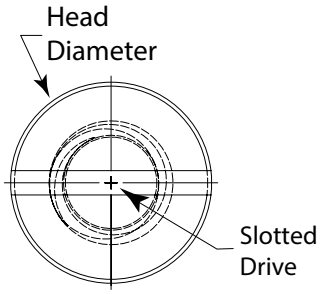

316 SS

Dimensions Table — Metric					
Thread Size	**Head Diameter**	**Head Height**	**Shoulder Dia.**	**Shoulder Lg.**	**Drive Size**
M3 x 0.5mm	5.50	1.00	3.80	1.00	2
M4 x 0.7mm	7.00	1.30	4.50	1.30	2.5
M5 x 0.8mm	8.50	1.70	5.20	1.70	3
M6 x 1mm	10.00	2.00	6.30	2.00	4
M8 x 1.25mm	13.00	2.70	8.50	2.70	5
M10 x 1.5mm	16.00	3.30	11.00	3.30	7

Ultra Low Head Slotted Cap Screws — Metric

316 SS (A4)

M3 × 0.5 Thread Size

Length	Thread Spacing	316 SS Part Number
5	Coarse	ZUL604M3X5
6	Coarse	ZUL604M3X6
8	Coarse	ZUL604M3X8
10	Coarse	ZUL604M3X10
12	Coarse	ZUL604M3X12
16	Coarse	ZUL604M3X16

M4 × 0.7 Thread Size

Length	Thread Spacing	316 SS Part Number
6	Coarse	ZUL604M4X6
8	Coarse	ZUL604M4X8
10	Coarse	ZUL604M4X10
12	Coarse	ZUL604M4X12
16	Coarse	ZUL604M4X16
20	Coarse	ZUL604M4X20
25	Coarse	ZUL604M4X25
30	Coarse	ZUL604M4X30
40	Coarse	ZUL604M4X40

M5 × 0.8 Thread Size

Length	Thread Spacing	316 SS Part Number
6	Coarse	ZUL604M5X6
8	Coarse	ZUL604M5X8
10	Coarse	ZUL604M5X10
12	Coarse	ZUL604M5X12
16	Coarse	ZUL604M5X16
20	Coarse	ZUL604M5X20
25	Coarse	ZUL604M5X25
30	Coarse	ZUL604M5X30
40	Coarse	ZUL604M5X40
50	Coarse	ZUL604M5X50

M6 × 1 Thread Size

Length	Thread Spacing	316 SS Part Number
8	Coarse	ZUL604M6X8
10	Coarse	ZUL604M6X10
12	Coarse	ZUL604M6X12
16	Coarse	ZUL604M6X16
20	Coarse	ZUL604M6X20
25	Coarse	ZUL604M6X25
30	Coarse	ZUL604M6X30
40	Coarse	ZUL604M6X40
50	Coarse	ZUL604M6X50

M8 × 1.25 Thread Size

Length	Thread Spacing	316 SS Part Number
10	Coarse	ZUL604M8X10
12	Coarse	ZUL604M8X12
16	Coarse	ZUL604M8X16
20	Coarse	ZUL604M8X20
25	Coarse	ZUL604M8X25
30	Coarse	ZUL604M8X30
40	Coarse	ZUL604M8X40
50	Coarse	ZUL604M8X50
60	Coarse	ZUL604M8X60

M10 × 1.5 Thread Size

Length	Thread Spacing	316 SS Part Number
12	Coarse	ZUL604M10X12
16	Coarse	ZUL604M10X16
20	Coarse	ZUL604M10X20
25	Coarse	ZUL604M10X25
30	Coarse	ZUL604M10X30
40	Coarse	ZUL604M10X40
50	Coarse	ZUL604M10X50
60	Coarse	ZUL604M10X60

Ultra Low Head Socket Cap Screws (no shoulder) — Metric

Alloy Steel | Black Oxide

Product Information

Excellent for tight areas and fastening applications which will not accept a countersunk flat head screw. Alloy Steel Ultra Low Head screws have reduced head heights about 1/3 less than the height of standard low head socket cap screws. A lower profile head reduces the chance of anything snagging on the head. In addition, all screw sizes are made with extra-wide heads that offer 33% more bearing surface and holding power than standard low head screws. The larger diameter head improves holding power especially when fastening lower strength materials. Screws have a Class 6g Thread Fit. All screws are fully threaded and do not have a shoulder. Length is measured from under the head. Low head screws are not recommended for high strength applications.

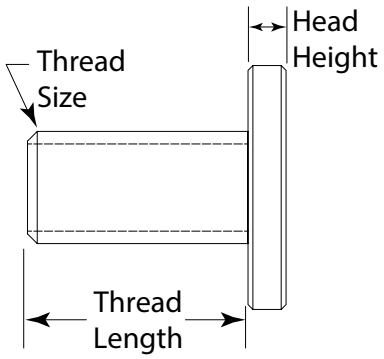

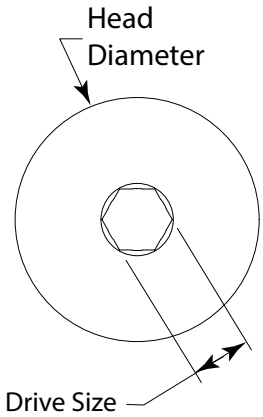

Alloy Steel, Black Oxide

Dimensions Table — Metric			
Thread Size	**Head Diameter**	**Head Height**	**Drive Size**
M2 × 0.4mm	4.50	0.80	1.5
M2.5 × 0.45mm	4.50	0.80	1.5
M3 x 0.5mm	5.50	1.00	2
M3.5 × 0.6mm	6.00	1.00	2
M4 x 0.7mm	7.00	1.30	2.5
M5 x 0.8mm	8.50	1.70	3
M6 x 1mm	10.00	2.00	4
M7 x 1mm	12.00	2.70	4.5
M8 x 1.25mm	13.00	2.70	5
M10 x 1.5mm	16.00	3.30	7
M12 × 1.75mm	18.00	4.00	6
M14 × 2mm	21.00	4.50	6

Ultra Low Head Socket Cap Screws (no shoulder) — Metric

Alloy Steel | Black Oxide

M2 × 0.4 Thread Size

Length	Thread Spacing	Alloy Steel Part Number
3	Coarse	ZUL700M2X3
4	Coarse	ZUL700M2X4
5	Coarse	ZUL700M2X5
6	Coarse	ZUL700M2X6
8	Coarse	ZUL700M2X8
10	Coarse	ZUL700M2X10
12	Coarse	ZUL700M2X12

M2.5 × 0.45 Thread Size

Length	Thread Spacing	Alloy Steel Part Number
3	Coarse	ZUL700M2.5X3
4	Coarse	ZUL700M2.5X4
5	Coarse	ZUL700M2.5X5
6	Coarse	ZUL700M2.5X6
8	Coarse	ZUL700M2.5X8
10	Coarse	ZUL700M2.5X10
12	Coarse	ZUL700M2.5X12
14	Coarse	ZUL700M2.5X14
15	Coarse	ZUL700M2.5X15

M3 × 0.5 Thread Size

Length	Thread Spacing	Alloy Steel Part Number
3	Coarse	ZUL700M3X3
4	Coarse	ZUL700M3X4
5	Coarse	ZUL700M3X5
6	Coarse	ZUL700M3X6
7	Coarse	ZUL700M3X7
8	Coarse	ZUL700M3X8
10	Coarse	ZUL700M3X10
12	Coarse	ZUL700M3X12
14	Coarse	ZUL700M3X14
16	Coarse	ZUL700M3X16
20	Coarse	ZUL700M3X20
25	Coarse	ZUL700M3X25

M3.5 × 0.6 Thread Size

Length	Thread Spacing	Alloy Steel Part Number
5	Coarse	ZUL700M3.5X5
6	Coarse	ZUL700M3.5X6
8	Coarse	ZUL700M3.5X8
10	Coarse	ZUL700M3.5X10
12	Coarse	ZUL700M3.5X12
14	Coarse	ZUL700M3.5X14
16	Coarse	ZUL700M3.5X16
20	Coarse	ZUL700M3.5X20
25	Coarse	ZUL700M3.5X25

M4 × 0.7 Thread Size

Length	Thread Spacing	Alloy Steel Part Number
4	Coarse	ZUL700M4X4
5	Coarse	ZUL700M4X5
6	Coarse	ZUL700M4X6
8	Coarse	ZUL700M4X8
10	Coarse	ZUL700M4X10
12	Coarse	ZUL700M4X12
14	Coarse	ZUL700M4X14
16	Coarse	ZUL700M4X16
18	Coarse	ZUL700M4X18
20	Coarse	ZUL700M4X20
25	Coarse	ZUL700M4X25
30	Coarse	ZUL700M4X30
35	Coarse	ZUL700M4X35
40	Coarse	ZUL700M4X40
50	Coarse	ZUL700M4X50

M5 × 0.8 Thread Size

Length	Thread Spacing	Alloy Steel Part Number
5	Coarse	ZUL700M5X5
6	Coarse	ZUL700M5X6
8	Coarse	ZUL700M5X8
10	Coarse	ZUL700M5X10
12	Coarse	ZUL700M5X12
14	Coarse	ZUL700M5X14
16	Coarse	ZUL700M5X16
18	Coarse	ZUL700M5X18
20	Coarse	ZUL700M5X20
25	Coarse	ZUL700M5X25
30	Coarse	ZUL700M5X30
35	Coarse	ZUL700M5X35
40	Coarse	ZUL700M5X40
50	Coarse	ZUL700M5X50

M6 × 1 Thread Size

Length	Thread Spacing	Alloy Steel Part Number
6	Coarse	ZUL700M6X6
8	Coarse	ZUL700M6X8
10	Coarse	ZUL700M6X10
12	Coarse	ZUL700M6X12
14	Coarse	ZUL700M6X14
16	Coarse	ZUL700M6X16
18	Coarse	ZUL700M6X18
20	Coarse	ZUL700M6X20
25	Coarse	ZUL700M6X25
30	Coarse	ZUL700M6X30
35	Coarse	ZUL700M6X35
40	Coarse	ZUL700M6X40
45	Coarse	ZUL700M6X45
50	Coarse	ZUL700M6X50
60	Coarse	ZUL700M6X60

Chart continued on next page

Ultra Low Head Socket Cap Screws (no shoulder) — Metric

Alloy Steel | Black Oxide

M7 x 1 Thread Size

Length	Thread Spacing	Alloy Steel Part Number
10	Coarse	ZUL700M7X10
12	Coarse	ZUL700M7X12
14	Coarse	ZUL700M7X14
16	Coarse	ZUL700M7X16
18	Coarse	ZUL700M7X18
20	Coarse	ZUL700M7X20
25	Coarse	ZUL700M7X25

M8 × 1.25 Thread Size

Length	Thread Spacing	Alloy Steel Part Number
6	Coarse	ZUL700M8X6
8	Coarse	ZUL700M8X8
10	Coarse	ZUL700M8X10
12	Coarse	ZUL700M8X12
14	Coarse	ZUL700M8X14
16	Coarse	ZUL700M8X16
18	Coarse	ZUL700M8X18
20	Coarse	ZUL700M8X20
22	Coarse	ZUL700M8X22
25	Coarse	ZUL700M8X25
30	Coarse	ZUL700M8X30
35	Coarse	ZUL700M8X35
40	Coarse	ZUL700M8X40
45	Coarse	ZUL700M8X45
50	Coarse	ZUL700M8X50
55	Coarse	ZUL700M8X55
60	Coarse	ZUL700M8X60
70	Coarse	ZUL700M8X70

M10 × 1.5 Thread Size

Length	Thread Spacing	Alloy Steel Part Number
10	Coarse	ZUL700M10X10
12	Coarse	ZUL700M10X12
14	Coarse	ZUL700M10X14
16	Coarse	ZUL700M10X16
20	Coarse	ZUL700M10X20
25	Coarse	ZUL700M10X25
30	Coarse	ZUL700M10X30
35	Coarse	ZUL700M10X35
40	Coarse	ZUL700M10X40
45	Coarse	ZUL700M10X45
50	Coarse	ZUL700M10X50
55	Coarse	ZUL700M10X55
60	Coarse	ZUL700M10X60
70	Coarse	ZUL700M10X70

M12 × 1.75 Thread Size

Length	Thread Spacing	Alloy Steel Part Number
10	Coarse	ZUL700M12X10
12	Coarse	ZUL700M12X12
14	Coarse	ZUL700M12X14
20	Coarse	ZUL700M12X20
25	Coarse	ZUL700M12X25
30	Coarse	ZUL700M12X30
35	Coarse	ZUL700M12X35
40	Coarse	ZUL700M12X40
45	Coarse	ZUL700M12X45
50	Coarse	ZUL700M12X50
60	Coarse	ZUL700M12X60

M14 × 2 Thread Size

Length	Thread Spacing	Alloy Steel Part Number
12	Coarse	ZUL700M14X12
14	Coarse	ZUL700M14X14
20	Coarse	ZUL700M14X20
25	Coarse	ZUL700M14X25
30	Coarse	ZUL700M14X30
40	Coarse	ZUL700M14X40
50	Coarse	ZUL700M14X50

Chart continued on next page

Extra Tall Socket Head Cap Screws — Inch

18-8 SS | Plain

Product Information

Extra Tall Head Screws have deep, accurate hex socket drives to facilitate tightening and removing screws in tight-fit applications. A higher head can help with locating a screw in spots where they are hard-to-reach in assembly. With a higher head height, we increased the socket drive depth over 45% as compared to a standard socket screw. The deeper drive allows for more wrench engagement and improved drive torque. Screws are made with 50% higher head heights than similar sized 1960 series socket head cap screws. Thread Class fit is 3A and screws are fully threaded. Length is measured from under head.

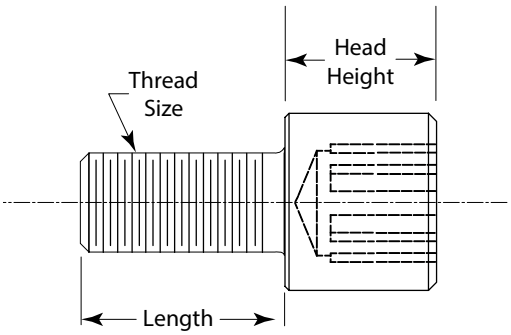

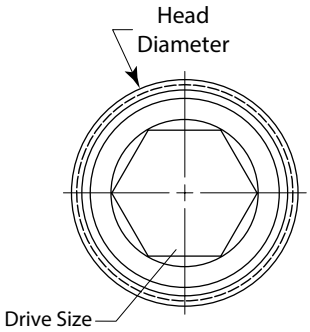

Dimensions Table — Inch

Thread Size	Head Diameter	Head Height	Drive Depth (min.)	Drive Size
2-56	.140	.129	.057	5/64
4-40	.183	.168	.076	3/32
6-32	.226	.207	.093	7/64
8-32	.270	.246	.116	9/64
10-32	.312	.285	.134	5/32
1/4-20	.375	.375	.180	3/16
5/16-18	.469	.469	.225	1/4
3/8-16	.563	.563	.270	5/16

2-56 Thread Size

Length	18-8 SS Part Number
1/4	ZSE60102C04

4-40 Thread Size

Length	18-8 SS Part Number
1/4	ZSE60140C04
5/16	ZSE60140C05
3/8	ZSE60140C06
1/2	ZSE60140C08

6-32 Thread Size

Length	18-8 SS Part Number
1/4	ZSE60106C04
3/8	ZSE60106C06
1/2	ZSE60106C08
5/8	ZSE60106C10
3/4	ZSE60106C12

8-32 Thread Size

Length	18-8 SS Part Number
3/8	ZSE60108C06
1/2	ZSE60108C08
5/8	ZSE60108C10
3/4	ZSE60108C12
1	ZSE60108C16

10-32 Thread Size

Length	18-8 SS Part Number
3/8	ZSE60110F06
1/2	ZSE60110F08
5/8	ZSE60110F10
3/4	ZSE60110F12
1	ZSE60110F16

1/4-20 Thread Size

Length	18-8 SS Part Number
3/8	ZSE60114C06
1/2	ZSE60114C08
5/8	ZSE60114C10
3/4	ZSE60114C12
7/8	ZSE60114C14
1	ZSE60114C16
1 1/4	ZSE60114C20
1 1/2	ZSE60114C24
2	ZSE60114C32

5/16-18 Thread Size

Length	18-8 SS Part Number
3/4	ZSE60151C12
1	ZSE60151C16

3/8-16 Thread Size

Length	18-8 SS Part Number
1	ZSE60381C16

Square Drive Socket Head Cap Screws — Inch

18-8 SS | Plain

Product Information

Hex socket screws are typically installed with an insertion tool with a separate hex socket bit. Square drive screws eliminates using a socket bit and the risk of a bit dropping into an assembly. The ball-locking fit of square drive screws prevent losing a screw during installation. The deeper drive allows for more wrench engagement and improved drive torque, especially in tight-fit applications. The increased head height of the screw can facilitate installation in hard-to- reach locations. Thread Class fit is 3A and depending on size, screws are fully threaded; longer lengths maybe partially threaded. Length is measured from under the head. Square Drive Screws meet our internal specification AMPG 2017 ZSQ.01.

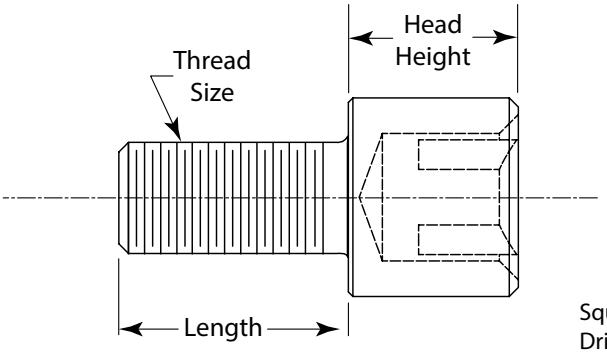

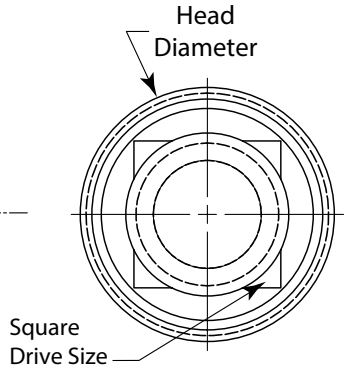

Dimensions Table — Inch				
Thread Size	**Head Diameter**	**Head Height**	**Drive Depth (min.)**	**Drive Size**
1/4-20	.438	.375	.250	1/4
5/16-18	.469	.469	.250	1/4
3/8-16	.625	.563	.375	3/8
1/2-13	.750	.750	.375	3/8

1/4-20 Thread Size

Length	18-8 SS Part Number
3/8	ZSQ60114C06
1/2	ZSQ60114C08
5/8	ZSQ60114C10
3/4	ZSQ60114C12
7/8	ZSQ60114C14
1	ZSQ60114C16
1-1/4	ZSQ60114C20
1-1/2*	ZSQ60114C24
2*	ZSQ60114C32

*Partially threaded, 1" minimum

5/16-18 Thread Size

Length	18-8 SS Part Number
3/4	ZSQ60151C12
1	ZSQ60151C16
1-1/4	ZSQ60151C20
1-1/2*	ZSQ60151C24
1-3/4*	ZSQ60151C28
2*	ZSQ60151C32

*Partially threaded, 1-1/8" minimum

3/8-16 Thread Size

Length	18-8 SS Part Number
3/4	ZSQ60138C12
1	ZSQ60138C16
1-1/4	ZSQ60138C20
1-1/2*	ZSQ60138C24
1-3/4*	ZSQ60138C28
2*	ZSQ60138C32

*Partially threaded, 1-1/4" minimum

1/2-13 Thread Size

Length	18-8 SS Part Number
1	ZSQ60112C16
1-1/4	ZSQ60112C20
1-1/2	ZSQ60112C24

Socket Head Captive Panel Screws — Inch

316 SS — Hex Drive

Product Information

This screw is an adaptation of ASME B18.3, ASME B18.3M, DIN 912 / ISO 4762 with a unthreaded reduced shank diameter. Designed to self-retain in a panel to prevent the loss of screws — a lost screw could cause catastrophic damage to a production line. Socket head allows for easy finger installation. Also used with equipment where speedy removal and reinstallation of panels is required. Install through a hole and thread on a retainer (sold separately) to keep these screws secure. Use an optional spring (sold separately) to provide even compression against panels. Screws, retainers, and springs are made from marine grade 316 stainless steel. Screws may be mildly magnetic. Length is measured from under the head. Thread Class is 3A.

- AMPG products are made in the USA, precision machined from DFARS compliant material, and lot traceable.
- 316 SS hex drive screws meet ASTM A276.
- Made from stainless steel, these screws have good chemical resistance and maybe mildly magnetic.

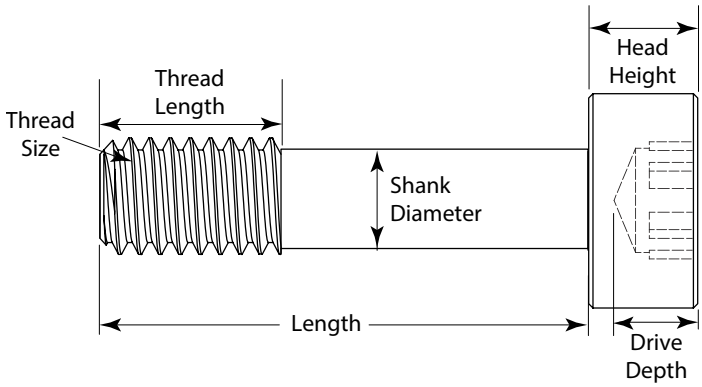

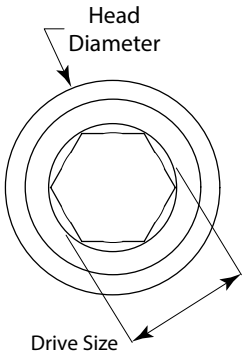

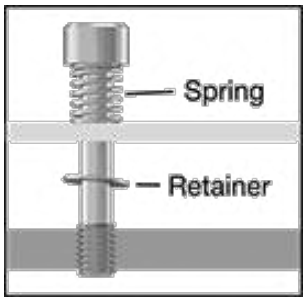

Dimensions Table — Inch

Thread Size	Thread Length (±.010)	Shank Dia. (±.005)	Head Dia, (max, min)	Head Height (max, min)	Drive Depth (min)	Drive Size
2-56	1/8	.061	.140 - .134	.086 - .083	.038	5/64
4-40	5/32	.078	.183 - .176	.112 - .108	.051	3/32
6-32	3/16	.095	.226 - .218	.138 - .134	.064	7/64
8-32	3/16	.120	.270 - .262	.164 - .159	.077	9/64
10-24	1/4	.130	.312 - .303	.190 - .185	.090	5/32
10-32	1/4	.130	.312 - .303	.190 - .185	.090	5/32
1/4-20	1/4	.175	.375- .365	.250 - .244	.120	3/16
1/4-28	1/4	.175	.375- .365	.250 - .244	.120	3/16
5/16-18	3/8	.230	.469 - .457	.312 - .306	.151	1/4
3/8-16	3/8	.280	.563 - .550	.375 - .368	.182	5/16
1/2-13	3/8	.400	.750 - .735	.500 - .492	.245	3/8

Socket Head Captive Panel Screws — Inch

316 SS — Hex Drive

2-56 Thread Size

Length	316 SS Part Number
1/4	ZCS60202C04
5/16	ZCS60202C05
3/8	ZCS60202C06
1/2	ZCS60202C08

4-40 Thread Size

Length	316 SS Part Number
1/4	ZCS60204C04
5/16	ZCS60204C05
3/8	ZCS60204C06
7/16	ZCS60204C07
1/2	ZCS60204C08
9/16	ZCS60204C09
5/8	ZCS60204C10
3/4	ZCS60204C12
7/8	ZCS60204C14
1	ZCS60204C16

6-32 Thread Size

Length	316 SS Part Number
5/16	ZCS60206C05
3/8	ZCS60206C06
7/16	ZCS60206C07
1/2	ZCS60206C08
9/16	ZCS60206C09
5/8	ZCS60206C10
3/4	ZCS60206C12
7/8	ZCS60206C14
1	ZCS60206C16
1-1/8	ZCS60206C18
1-1/4	ZCS60206C20

8-32 Thread Size

Length	316 SS Part Number
3/8	ZCS60208C06
7/16	ZCS60208C07
1/2	ZCS60208C08
9/16	ZCS60208C09
5/8	ZCS60208C10
3/4	ZCS60208C12
7/8	ZCS60208C14
1	ZCS60208C16
1-1/8	ZCS60208C18
1-1/4	ZCS60208C20

10-24 Thread Size

Length	316 SS Part Number
3/8	ZCS60210C06
7/16	ZCS60210C07
1/2	ZCS60210C08
9/16	ZCS60210C09
5/8	ZCS60210C10
3/4	ZCS60210C12
7/8	ZCS60210C14
1	ZCS60210C16
1-1/4	ZCS60210C20
1-3/8	ZCS60210C22
1-1/2	ZCS60210C24
1-3/4	ZCS60210C28

Socket Head Captive Panel Screws — Inch

316 SS — Hex Drive

10-32 Thread Size

Length	316 SS Part Number
3/8	ZCS60210F06
7/16	ZCS60210F07
1/2	ZCS60210F08
9/16	ZCS60210F09
5/8	ZCS60210F10
3/4	ZCS60210F12
7/8	ZCS60210F14
1	ZCS60210F16
1-1/4	ZCS60210F20
1-3/8	ZCS60210F22
1-1/2	ZCS60210F24
1-3/4	ZCS60210F28

1/4-20 Thread Size

Length	316 SS Part Number
1/2	ZCS60214C08
5/8	ZCS60214C10
3/4	ZCS60214C12
7/8	ZCS60214C14
1	ZCS60214C16
1-1/4	ZCS60214C20
1-1/2	ZCS60214C24
1-3/4	ZCS60214C28
2	ZCS60214C32

1/4-28 Thread Size

Length	316 SS Part Number
1/2	ZCS60214F08
5/8	ZCS60214F10
3/4	ZCS60214F12
7/8	ZCS60214F14
1	ZCS60214F16
1-1/4	ZCS60214F20
1-1/2	ZCS60214F24
1-3/4	ZCS60214F28
2	ZCS60214F32

5/16-18 Thread Size

Length	316 SS Part Number
1/2	ZCS60251C08
5/8	ZCS60251C10
3/4	ZCS60251C12
7/8	ZCS60251C14
1	ZCS60251C16
1-1/4	ZCS60251C20
1-1/2	ZCS60251C24
1-3/4	ZCS60251C28
2	ZCS60251C32

3/8-16 Thread Size

Length	316 SS Part Number
1/2	ZCS60238C08
5/8	ZCS60238C10
3/4	ZCS60238C12
7/8	ZCS60238C14
1	ZCS60238C16
1-1/4	ZCS60238C20
1-1/2	ZCS60238C24
1-3/4	ZCS60238C28
2	ZCS60238C32

1/2-13 Thread Size

Length	316 SS Part Number
1	ZCS60212C16
1-1/4	ZCS60212C20
1-1/2	ZCS60212C24
1-3/4	ZCS60212C28
2	ZCS60212C32

Socket Head Captive Panel Screws — Metric

316 SS — Hex Drive

Product Information

This screw is an adaptation of ASME B18.3, ASME B18.3M, DIN 912 / ISO 4762 with a unthreaded reduced shank diameter. Designed to self-retain in a panel to prevent the loss of screws — a lost screw could cause catastrophic damage to a production line. Socket head allows for easy finger installation. Also used with equipment where speedy removal and reinstallation of panels is required. Install through a hole and thread on a retainer (sold separately) to keep these screws secure. Use an optional spring (sold separately) to provide even compression against panels. Screws, retainers, and springs are made from marine grade 316 stainless steel. Screws may be mildly magnetic. Length is measured from under the head. Thread Class is 6g.

- AMPG products are made in the USA, precision machined from DFARS compliant material, and lot traceable.
- 316 SS hex drive screws meet ASTM A276.
- Made from stainless steel, these screws have good chemical resistance and maybe mildly magnetic.

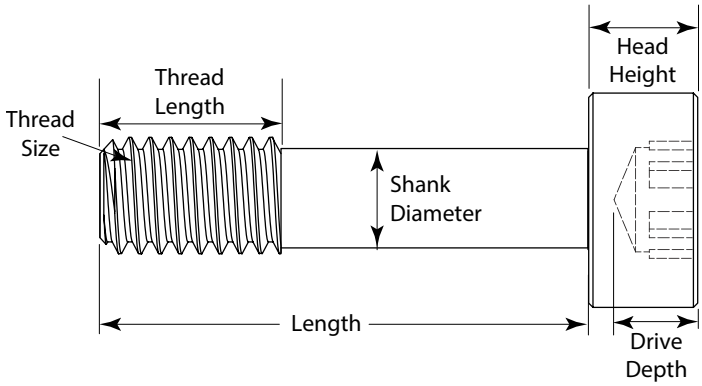

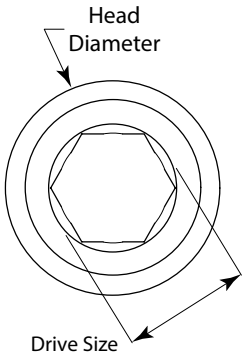

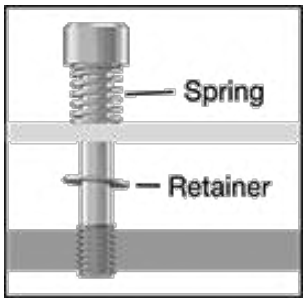

Dimensions Table — Metric

Thread Size	Thread Length (±.010)	Shank Dia. (±.005)	Head Dia, (max, min)	Head Height (max, min)	Drive Depth (min)	Drive Size
M2 × 0.4	3.00	1.40	3.80 - 3.65	2.00 - 1.91	1.00	1.5
M2.5 × 0.45	3.50	1.80	4.50 - 4.33	2.50 - 2.40	1.25	2
M3 × 0.5	4.00	2.20	5.50 - 5.32	3.00 - 2.89	1.50	2.5
M3.5 x 0.6	4.00	2.60	6.00 - 5.80	3.50 - 3.40	1.50	2.5
M4 x 0.7	4.00	3.00	7.00 - 6.80	4.00 - 3.88	2.00	3
M5 × 0.8	4.00	3.80	8.50 - 8.27	5.00 - 4.86	2.50	4
M6 × 1	6.00	4.50	10.00 - 9.74	6.00 - 5.85	3.00	5
M8 × 1.25	8.00	6.20	13.00 - 12.70	8.00 - 7.83	4.00	6
M10 × 1.5	8.00	8.00	16.00 - 15.67	10.00 - 9.81	5.00	8
M12 x 1.75	10.00	9.50	17.63 - 12.00	12.00 - 11.79	6.00	10

Socket Head Captive Panel Screws — Metric

316 SS — Hex Drive

M2 × 0.4 Thread Size

Length	316 SS Part Number
8	ZCS602M2X8
10	ZCS602M2X10
12	ZCS602M2X12

M2.5 × 0.45 Thread Size

Length	316 SS Part Number
6	ZCS602M2.5X6
8	ZCS602M2.5X8
10	ZCS602M2.5X10
12	ZCS602M2.5X12
14	ZCS602M2.5X14
16	ZCS602M2.5X16
18	ZCS602M2.5X18
20	ZCS602M2.5X20
22	ZCS602M2.5X22
25	ZCS602M2.5X25

M3 × 0.5 Thread Size

Length	316 SS Part Number
6	ZCS602M3X6
8	ZCS602M3X8
10	ZCS602M3X10
12	ZCS602M3X12
14	ZCS602M3X14
16	ZCS602M3X16
18	ZCS602M3X18
20	ZCS602M3X20
22	ZCS602M3X22
25	ZCS602M3X25
30	ZCS602M3X30

M3.5 x 0.6 Thread Size

Length	316 SS Part Number
8	ZCS602M3.5X8
10	ZCS602M3.5X10
12	ZCS602M3.5X12
16	ZCS602M3.5X16
18	ZCS602M3.5X18
20	ZCS602M3.5X20
22	ZCS602M3.5X22
25	ZCS602M3.5X25
30	ZCS602M3.5X30
35	ZCS602M3.5X35

M4 x 0.7 Thread Size

Length	316 SS Part Number
8	ZCS602M4X8
10	ZCS602M4X10
12	ZCS602M4X12
16	ZCS602M4X16
18	ZCS602M4X18
20	ZCS602M4X20
22	ZCS602M4X22
25	ZCS602M4X25
30	ZCS602M4X30
35	ZCS602M4X35

Socket Head Captive Panel Screws — Metric

316 SS — Hex Drive

M5 × 0.8 Thread Size

Length	316 SS Part Number
8	ZCS602M5X8
10	ZCS602M5X10
12	ZCS602M5X12
16	ZCS602M5X16
20	ZCS602M5X20
22	ZCS602M5X22
25	ZCS602M5X25
30	ZCS602M5X30
35	ZCS602M5X35
40	ZCS602M5X40
45	ZCS602M5X45
50	ZCS602M5X50

M6 × 1 Thread Size

Length	316 SS Part Number
10	ZCS602M6X10
12	ZCS602M6X12
16	ZCS602M6X16
20	ZCS602M6X20
25	ZCS602M6X25
30	ZCS602M6X30
35	ZCS602M6X35
40	ZCS602M6X40
45	ZCS602M6X45
50	ZCS602M6X50

M8 × 1.25 Thread Size

Length	316 SS Part Number
16	ZCS602M8X16
20	ZCS602M8X20
25	ZCS602M8X25
30	ZCS602M8X30
35	ZCS602M8X35
40	ZCS602M8X40
45	ZCS602M8X45
50	ZCS602M8X50

M10 × 1.5 Thread Size

Length	316 SS Part Number
16	ZCS602M10X16
20	ZCS602M10X20
25	ZCS602M10X25
30	ZCS602M10X30
35	ZCS602M10X35
40	ZCS602M10X40
45	ZCS602M10X45
50	ZCS602M10X50

M12 x 1.75 Thread Size

Length	316 SS Part Number
25	ZCS602M12X25
30	ZCS602M12X30
35	ZCS602M12X35
40	ZCS602M12X40
45	ZCS602M12X45
50	ZCS602M12X50

Button Head Captive Panel Screws — Inch

316 SS — Hex Drive

Product Information

This screw is an adaptation of ASME B18.3, ASME B18.3.4M, ISO 7380 with a unthreaded reduced shank diameter. Designed to self-retain in a panel to prevent the loss of screws — a lost screw could cause catastrophic damage to a production line. Button head screws have a rounded, low-profile head, well suited for use within confined spaces. Also used with equipment where speedy removal and reinstallation of panels is required. Install through a hole and thread on a retainer (sold separately) to keep these screws secure. Use an optional spring (sold separately) to provide even compression against panels. Screws, retainers, and springs are made from marine grade 316 stainless steel. Screws may be mildly magnetic. Length is measured from under the head. Thread Class is 3A.

- AMPG products are made in the USA, precision machined from DFARS compliant material, and lot traceable.
- 316 SS hex drive screws meet ASTM A276.
- Made from stainless steel, these screws have good chemical resistance and maybe mildly magnetic.

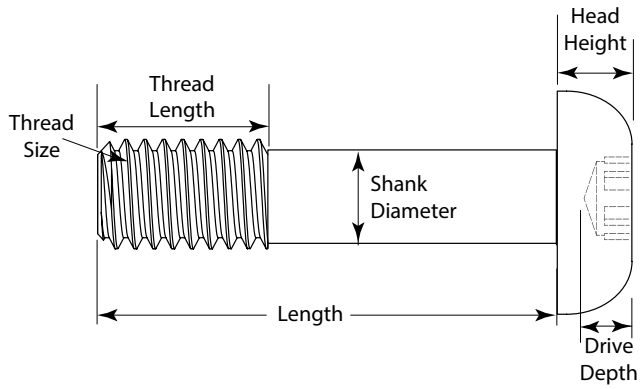

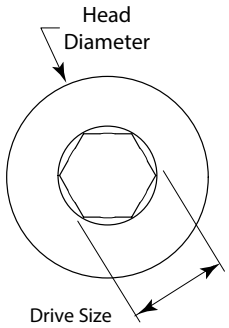

Dimensions Table — Inch

Thread Size	Thread Length (±.010)	Shank Dia. (±.005)	Head Dia, (max, min)	Head Height (max, min)	Drive Depth (min)	Drive Size
2-56	1/8	.061	.164 - .154	.046 - .038	.028	.050
4-40	5/32	.078	.213 - .201	.059 - .051	.035	1/16
6-32	3/16	.095	.262 - .250	.073 - .063	.044	5/64
8-32	3/16	.120	.312 - .298	.087 - .077	.052	3/32
10-24	1/4	.130	.361 - .347	.101 - .091	.070	1/8
10-32	1/4	.130	.361 - .347	.101 - .091	.070	1/8
1/4-20	1/4	.175	.437 - .419	.132 - .122	.087	5/32
1/4-28	1/4	.175	.437 - .419	.132 - .122	.087	5/32
5/16-18	3/8	.230	.547 - .527	.166 - .152	.105	3/16
3/8-16	3/8	.280	.656 - .636	.199 - .185	.122	7/32
1/2-13	3/8	.400	.875 - .851	.265 - .245	.175	5/16

Button Head Captive Panel Screws — Inch

316 SS — Hex Drive

2-56 Thread Size

Length	316 SS Part Number
1/4	ZCB60202C04
5/16	ZCB60202C05
3/8	ZCB60202C06
1/2	ZCB60202C08

4-40 Thread Size

Length	316 SS Part Number
1/4	ZCB60204C04
5/16	ZCB60204C05
3/8	ZCB60204C06
7/16	ZCB60204C07
1/2	ZCB60204C08
9/16	ZCB60204C09
5/8	ZCB60204C10
3/4	ZCB60204C12
7/8	ZCB60204C14
1	ZCB60204C16

6-32 Thread Size

Length	316 SS Part Number
5/16	ZCB60206C05
3/8	ZCB60206C06
7/16	ZCB60206C07
1/2	ZCB60206C08
9/16	ZCB60206C09
5/8	ZCB60206C10
3/4	ZCB60206C12
7/8	ZCB60206C14
1	ZCB60206C16
1-1/8	ZCB60206C18
1-1/4	ZCB60206C20

8-32 Thread Size

Length	316 SS Part Number
3/8	ZCB60208C06
7/16	ZCB60208C07
1/2	ZCB60208C08
9/16	ZCB60208C09
5/8	ZCB60208C10
3/4	ZCB60208C12
7/8	ZCB60208C14
1	ZCB60208C16
1-1/8	ZCB60208C18
1-1/4	ZCB60208C20

10-24 Thread Size

Length	316 SS Part Number
3/8	ZCB60210C06
7/16	ZCB60210C07
1/2	ZCB60210C08
9/16	ZCB60210C09
5/8	ZCB60210C10
3/4	ZCB60210C12
7/8	ZCB60210C14
1	ZCB60210C16
1-1/4	ZCB60210C20
1-3/8	ZCB60210C22
1-1/2	ZCB60210C24
1-3/4	ZCB60210C28

Button Head Captive Panel Screws — Inch

316 SS — Hex Drive

10-32 Thread Size

Length	316 SS Part Number
3/8	ZCB60210F06
7/16	ZCB60210F07
1/2	ZCB60210F08
9/16	ZCB60210F09
5/8	ZCB60210F10
3/4	ZCB60210F12
7/8	ZCB60210F14
1	ZCB60210F16
1-1/4	ZCB60210F20
1-3/8	ZCB60210F22
1-1/2	ZCB60210F24
1-3/4	ZCB60210F28

1/4-20 Thread Size

Length	316 SS Part Number
1/2	ZCB60214C08
5/8	ZCB60214C10
3/4	ZCB60214C12
7/8	ZCB60214C14
1	ZCB60214C16
1-1/4	ZCB60214C20
1-1/2	ZCB60214C24
1-3/4	ZCB60214C28
2	ZCB60214C32

1/4-28 Thread Size

Length	316 SS Part Number
1/2	ZCB60214F08
5/8	ZCB60214F10
3/4	ZCB60214F12
7/8	ZCB60214F14
1	ZCB60214F16
1-1/4	ZCB60214F20
1-1/2	ZCB60214F24
1-3/4	ZCB60214F28
2	ZCB60214F32

5/16-18 Thread Size

Length	316 SS Part Number
1/2	ZCB60251C08
5/8	ZCB60251C10
3/4	ZCB60251C12
7/8	ZCB60251C14
1	ZCB60251C16
1-1/4	ZCB60251C20
1-1/2	ZCB60251C24
1-3/4	ZCB60251C28
2	ZCB60251C32

3/8-16 Thread Size

Length	316 SS Part Number
1/2	ZCB60238C08
5/8	ZCB60238C10
3/4	ZCB60238C12
7/8	ZCB60238C14
1	ZCB60238C16
1-1/4	ZCB60238C20
1-1/2	ZCB60238C24
1-3/4	ZCB60238C28
2	ZCB60238C32

1/2-13 Thread Size

Length	316 SS Part Number
1	ZCB60212C16
1-1/4	ZCB60212C20
1-1/2	ZCB60212C24
1-3/4	ZCB60212C28
2	ZCB60212C32

Button Socket Head Captive Panel Screws — Metric

316 SS — Hex Drive

Product Information

This screw is an adaptation of ASME B18.3, ASME B18.3.4M, ISO 7380 with a unthreaded reduced shank diameter. Designed to self-retain in a panel to prevent the loss of screws — a lost screw could cause catastrophic damage to a production line. Button head screws have a rounded, low-profile head, well suited for use within confined spaces. Also used with equipment where speedy removal and reinstallation of panels is required. Install through a hole and thread on a retainer (sold separately) to keep these screws secure. Use an optional spring (sold separately) to provide even compression against panels. Screws, retainers, and springs are made from marine grade 316 stainless steel. Screws may be mildly magnetic. Length is measured from under the head. Thread Class is 6g.

- AMPG products are made in the USA, precision machined from DFARS compliant material, and lot traceable.
- 316 SS hex drive screws meet ASTM A276.
- Made from stainless steel, these screws have good chemical resistance and maybe mildly magnetic.

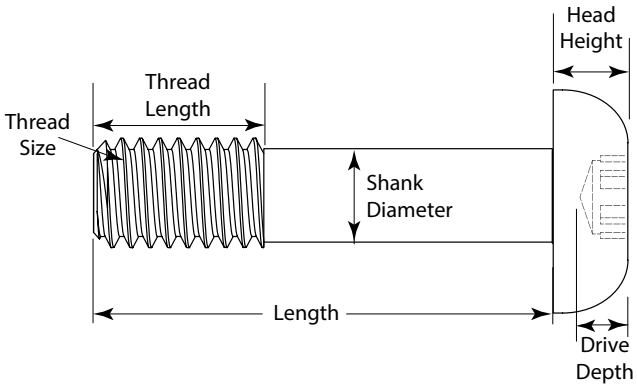

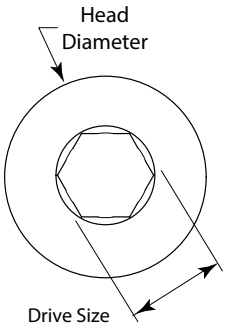

Dimensions Table — Metric

Thread Size	Thread Length (±.010)	Shank Dia. (±.005)	Head Dia, (max, min)	Head Height (max, min)	Drive Depth (min)	Drive Size
M2 × 0.4	3.00	1.40	3.50 - 3.30	1.30 - 1.11	0.80	1.27
M2.5 × 0.45	3.50	1.80	4.50 - 4.20	1.50 - 1.28	1.00	1.5
M3 × 0.5	4.00	2.20	5.70 - 5.40	1.65 - 1.40	1.04	2
M3.5 x 0.6	4.00	2.60	6.60 - 6.30	1.90 - 1.64	1.04	2
M4 x 0.7	4.00	3.00	7.60 - 7.24	2.20 - 1.95	1.30	2.5
M5 × 0.8	4.00	3.80	9.50 - 9.14	2.75 - 2.50	1.56	3
M6 × 1	6.00	4.50	10.50 - 10.07	3.30 - 3.00	2.08	4
M8 × 1.25	8.00	6.20	14.00 - 13.57	4.40 - 4.10	2.60	5
M10 × 1.5	8.00	8.00	17.50 - 17.07	5.50 - 5.20	3.12	6
M12 x 1.75	10.00	9.50	21.00 - 20.48	6.60 - 6.24	4.16	8

Button Socket Head Captive Panel Screws — Metric

316 SS — Hex Drive

M2 × 0.4 Thread Size

Length	316 SS Part Number
8	ZCB602M2X8
10	ZCB602M2X10
12	ZCB602M2X12

M2.5 × 0.45 Thread Size

Length	316 SS Part Number
6	ZCB602M2.5X6
8	ZCB602M2.5X8
10	ZCB602M2.5X10
12	ZCB602M2.5X12
14	ZCB602M2.5X14
16	ZCB602M2.5X16
18	ZCB602M2.5X18
20	ZCB602M2.5X20
22	ZCB602M2.5X22
25	ZCB602M2.5X25

M3 × 0.5 Thread Size

Length	316 SS Part Number
6	ZCB602M3X6
8	ZCB602M3X8
10	ZCB602M3X10
12	ZCB602M3X12
14	ZCB602M3X14
16	ZCB602M3X16
18	ZCB602M3X18
20	ZCB602M3X20
22	ZCB602M3X22
25	ZCB602M3X25
30	ZCB602M3X30

M3.5 x 0.6 Thread Size

Length	316 SS Part Number
8	ZCB602M3.5X8
10	ZCB602M3.5X10
12	ZCB602M3.5X12
16	ZCB602M3.5X16
18	ZCB602M3.5X18
20	ZCB602M3.5X20
22	ZCB602M3.5X22
25	ZCB602M3.5X25
30	ZCB602M3.5X30
35	ZCB602M3.5X35

M4 x 0.7 Thread Size

Length	316 SS Part Number
8	ZCB602M4X8
10	ZCB602M4X10
12	ZCB602M4X12
16	ZCB602M4X16
18	ZCB602M4X18
20	ZCB602M4X20
22	ZCB602M4X22
25	ZCB602M4X25
30	ZCB602M4X30
35	ZCB602M4X35

Button Socket Head Captive Panel Screws — Metric

316 SS — Hex Drive

M5 × 0.8 Thread Size

Length	316 SS Part Number
8	ZCB602M5X8
10	ZCB602M5X10
12	ZCB602M5X12
16	ZCB602M5X16
20	ZCB602M5X20
22	ZCB602M5X22
25	ZCB602M5X25
30	ZCB602M5X30
35	ZCB602M5X35
40	ZCB602M5X40
45	ZCB602M5X45
50	ZCB602M5X50

M6 × 1 Thread Size

Length	316 SS Part Number
10	ZCB602M6X10
12	ZCB602M6X12
16	ZCB602M6X16
20	ZCB602M6X20
25	ZCB602M6X25
30	ZCB602M6X30
35	ZCB602M6X35
40	ZCB602M6X40
45	ZCB602M6X45
50	ZCB602M6X50

M8 × 1.25 Thread Size

Length	316 SS Part Number
16	ZCB602M8X16
20	ZCB602M8X20
25	ZCB602M8X25
30	ZCB602M8X30
35	ZCB602M8X35
40	ZCB602M8X40
45	ZCB602M8X45
50	ZCB602M8X50

M10 × 1.5 Thread Size

Length	316 SS Part Number
16	ZCB602M10X16
20	ZCB602M10X20
25	ZCB602M10X25
30	ZCB602M10X30
35	ZCB602M10X35
40	ZCB602M10X40
45	ZCB602M10X45
50	ZCB602M10X50

M12 x 1.75 Thread Size

Length	316 SS Part Number
25	ZCB602M12X25
30	ZCB602M12X30
35	ZCB602M12X35
40	ZCB602M12X40
45	ZCB602M12X45
50	ZCB602M12X50

82° Flat Socket Head Captive Panel Screws — Inch

316 SS — Hex Drive

Product Information

This screw is an adaptation of ASME B18.3, ASME B18.3.5M, ISO 7991 with a unthreaded reduced shank diameter. Designed to self-retain in a panel to prevent the loss of screws — a lost screw could cause catastrophic damage to a production line. The 82° flat head is angled under the head to sit flush within countersunk holes. Also used with equipment where speedy removal and reinstallation of panels is required. Install through a hole and thread on a retainer (sold separately) to keep these screws secure. Use an optional spring (sold separately) to provide even compression against panels. Screws, retainers, and springs are made from marine grade 316 stainless steel. Screws may be mildly magnetic. Length is measured from the top of the head. Thread Class is 3A.

- AMPG products are made in the USA, precision machined from DFARS compliant material, and lot traceable.
- 316 SS hex drive screws meet ASTM A276.
- Made from stainless steel, these screws have good chemical resistance and maybe mildly magnetic.

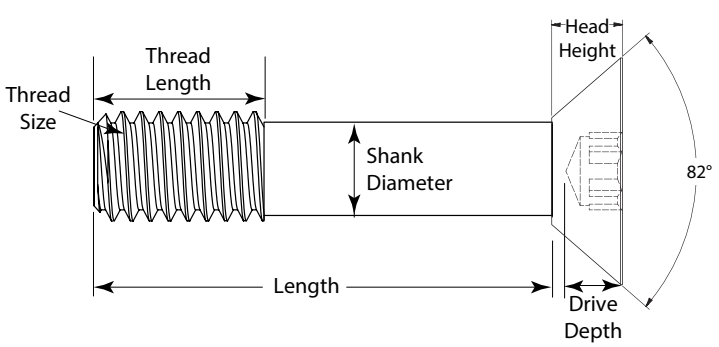

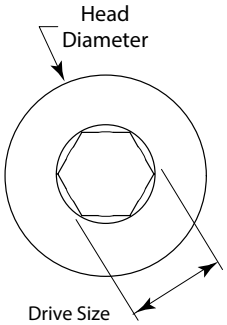

Dimensions Table — Inch						
Thread Size	**Thread Length** (±.010)	**Shank Dia.** (±.005)	**Head Dia,** (max, min)	**Head Height** (ref.)	**Drive Depth** (min)	**Drive Size**
2-56	1/8	.061	.197 - .168	.064	.038	.050
4-40	5/32	.078	.255 - .218	.083	.055	1/16
6-32	3/16	.095	.307- .263	.097	.066	5/64
8-32	3/16	.120	.359 - .311	.112	.076	3/32
10-24	1/4	.130	.411 - .359	.127	.087	1/8
10-32	1/4	.130	.411 - .359	.127	.087	1/8
1/4-20	1/4	.175	.531 - .480	.161	.111	5/32
1/4-28	1/4	.175	.531 - .480	.161	.111	5/32
5/16-18	3/8	.230	.656 - .600	.198	.135	3/16
3/8-16	3/8	.280	.781 - .720	.234	.159	7/32
1/2-13	3/8	.400	.938 - .872	.251	.172	5/16

82° Flat Socket Head Captive Panel Screws — Inch

316 SS — Hex Drive

2-56 Thread Size

Length	316 SS Part Number
1/4	ZCF60202C04
5/16	ZCF60202C05
3/8	ZCF60202C06
1/2	ZCF60202C08

4-40 Thread Size

Length	316 SS Part Number
1/4	ZCF60204C04
5/16	ZCF60204C05
3/8	ZCF60204C06
7/16	ZCF60204C07
1/2	ZCF60204C08
9/16	ZCF60204C09
5/8	ZCF60204C10
3/4	ZCF60204C12
7/8	ZCF60204C14
1	ZCF60204C16

6-32 Thread Size

Length	316 SS Part Number
5/16	ZCF60206C05
3/8	ZCF60206C06
7/16	ZCF60206C07
1/2	ZCF60206C08
9/16	ZCF60206C09
5/8	ZCF60206C10
3/4	ZCF60206C12
7/8	ZCF60206C14
1	ZCF60206C16
1-1/8	ZCF60206C18
1-1/4	ZCF60206C20

8-32 Thread Size

Length	316 SS Part Number
3/8	ZCF60208C06
7/16	ZCF60208C07
1/2	ZCF60208C08
9/16	ZCF60208C09
5/8	ZCF60208C10
3/4	ZCF60208C12
7/8	ZCF60208C14
1	ZCF60208C16
1-1/8	ZCF60208C18
1-1/4	ZCF60208C20

10-24 Thread Size

Length	316 SS Part Number
3/8	ZCF60210C06
7/16	ZCF60210C07
1/2	ZCF60210C08
9/16	ZCF60210C09
5/8	ZCF60210C10
3/4	ZCF60210C12
7/8	ZCF60210C14
1	ZCF60210C16
1-1/4	ZCF60210C20
1-3/8	ZCF60210C22
1-1/2	ZCF60210C24
1-3/4	ZCF60210C28

82° Flat Socket Head Captive Panel Screws — Inch

316 SS — Hex Drive

10-32 Thread Size

Length	316 SS Part Number
3/8	ZCF60210F06
7/16	ZCF60210F07
1/2	ZCF60210F08
9/16	ZCF60210F09
5/8	ZCF60210F10
3/4	ZCF60210F12
7/8	ZCF60210F14
1	ZCF60210F16
1-1/4	ZCF60210F20
1-3/8	ZCF60210F22
1-1/2	ZCF60210F24
1-3/4	ZCF60210F28

1/4-20 Thread Size

Length	316 SS Part Number
1/2	ZCF60214C08
5/8	ZCF60214C10
3/4	ZCF60214C12
7/8	ZCF60214C14
1	ZCF60214C16
1-1/4	ZCF60214C20
1-1/2	ZCF60214C24
1-3/4	ZCF60214C28
2	ZCF60214C32

1/4-28 Thread Size

Length	316 SS Part Number
1/2	ZCF60214F08
5/8	ZCF60214F10
3/4	ZCF60214F12
7/8	ZCF60214F14
1	ZCF60214F16
1-1/4	ZCF60214F20
1-1/2	ZCF60214F24
1-3/4	ZCF60214F28
2	ZCF60214F32

5/16-18 Thread Size

Length	316 SS Part Number
1/2	ZCF60251C08
5/8	ZCF60251C10
3/4	ZCF60251C12
7/8	ZCF60251C14
1	ZCF60251C16
1-1/4	ZCF60251C20
1-1/2	ZCF60251C24
1-3/4	ZCF60251C28
2	ZCF60251C32

3/8-16 Thread Size

Length	316 SS Part Number
1/2	ZCF60238C08
5/8	ZCF60238C10
3/4	ZCF60238C12
7/8	ZCF60238C14
1	ZCF60238C16
1-1/4	ZCF60238C20
1-1/2	ZCF60238C24
1-3/4	ZCF60238C28
2	ZCF60238C32

1/2-13 Thread Size

Length	316 SS Part Number
1	ZCF60212C16
1-1/4	ZCF60212C20
1-1/2	ZCF60212C24
1-3/4	ZCF60212C28
2	ZCF60212C32

90° Flat Socket Head Captive Panel Screws — Metric

316 SS — Hex Drive

Product Information

This screw is an adaptation of ASME B18.3, ASME B18.3.5M, ISO 7991 with a unthreaded reduced shank diameter. Designed to self-retain in a panel to prevent the loss of screws — a lost screw could cause catastrophic damage to a production line. The 90° flat head is angled under the head to sit flush within countersunk holes. Also used with equipment where speedy removal and reinstallation of panels is required. Install through a hole and thread on a retainer (sold separately) to keep these screws secure. Use an optional spring (sold separately) to provide even compression against panels. Screws, retainers, and springs are made from marine grade 316 stainless steel. Screws may be mildly magnetic. Length is measured from the top of the head. Thread Class is 6g.

- AMPG products are made in the USA, precision machined from DFARS compliant material, and lot traceable.
- 316 SS hex drive screws meet ASTM A276.
- Made from stainless steel, these screws have good chemical resistance and maybe mildly magnetic.

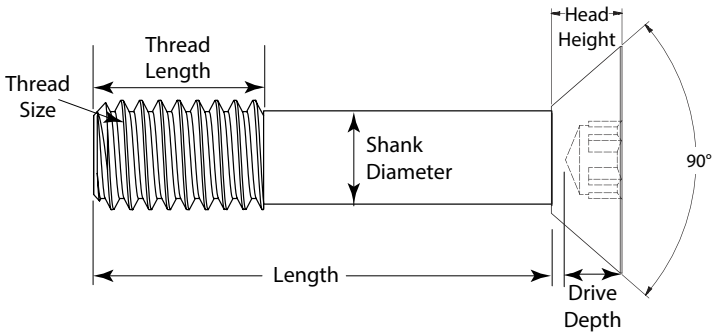

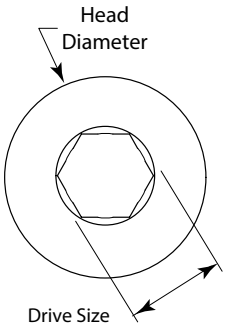

Dimensions Table — Metric

Thread Size	Thread Length (±.010)	Shank Dia. (±.005)	Head Dia, (max, min)	Head Height (ref.)	Drive Depth (min)	Drive Size
M2 × 0.4	3.00	1.40	4.00 - 3.70	1.20	0.75	1.3
M2.5 × 0.45	3.50	1.80	5.00 - 4.70	1.50	0.80	1.5
M3 × 0.5	4.00	2.20	6.00 - 5.70	1.70	0.95	2
M3.5 x 0.6	4.00	2.60	6.50 - 6.20	2.10	0.95	2
M4 x 0.7	4.00	3.00	8.00 - 7.64	2.30	1.55	2.5
M5 × 0.8	4.00	3.80	10.00 - 9.64	2.80	2.05	3
M6 × 1	6.00	4.50	12.00 - 11.57	3.30	2.25	4
M8 × 1.25	8.00	6.20	16.00 - 15.57	4.40	3.20	5
M10 × 1.5	8.00	8.00	20.00 - 19.48	5.50	4.10	6
M12 x 1.75	10.00	9.50	24.00 - 23.48	6.50	4.30	8

90° Flat Socket Head Captive Panel Screws — Metric

316 SS — Hex Drive

M2 × 0.4 Thread Size

Length	316 SS Part Number
8	ZCF602M2X8
10	ZCF602M2X10
12	ZCF602M2X12

M2.5 × 0.45 Thread Size

Length	316 SS Part Number
6	ZCF602M2.5X6
8	ZCF602M2.5X8
10	ZCF602M2.5X10
12	ZCF602M2.5X12
14	ZCF602M2.5X14
16	ZCF602M2.5X16
18	ZCF602M2.5X18
20	ZCF602M2.5X20
22	ZCF602M2.5X22
25	ZCF602M2.5X25

M3 × 0.5 Thread Size

Length	316 SS Part Number
6	ZCF602M3X6
8	ZCF602M3X8
10	ZCF602M3X10
12	ZCF602M3X12
14	ZCF602M3X14
16	ZCF602M3X16
18	ZCF602M3X18
20	ZCF602M3X20
22	ZCF602M3X22
25	ZCF602M3X25
30	ZCF602M3X30

M3.5 x 0.6 Thread Size

Length	316 SS Part Number
8	ZCF602M3.5X8
10	ZCF602M3.5X10
12	ZCF602M3.5X12
16	ZCF602M3.5X16
18	ZCF602M3.5X18
20	ZCF602M3.5X20
22	ZCF602M3.5X22
25	ZCF602M3.5X25
30	ZCF602M3.5X30
35	ZCF602M3.5X35

M4 x 0.7 Thread Size

Length	316 SS Part Number
8	ZCF602M4X8
10	ZCF602M4X10
12	ZCF602M4X12
16	ZCF602M4X16
18	ZCF602M4X18
20	ZCF602M4X20
22	ZCF602M4X22
25	ZCF602M4X25
30	ZCF602M4X30
35	ZCF602M4X35

90° Flat Socket Head Captive Panel Screws — Metric

316 SS — Hex Drive

M5 × 0.8 Thread Size

Length	316 SS Part Number
8	ZCF602M5X8
10	ZCF602M5X10
12	ZCF602M5X12
16	ZCF602M5X16
20	ZCF602M5X20
22	ZCF602M5X22
25	ZCF602M5X25
30	ZCF602M5X30
35	ZCF602M5X35
40	ZCF602M5X40
45	ZCF602M5X45
50	ZCF602M5X50

M6 × 1 Thread Size

Length	316 SS Part Number
10	ZCF602M6X10
12	ZCF602M6X12
16	ZCF602M6X16
20	ZCF602M6X20
25	ZCF602M6X25
30	ZCF602M6X30
35	ZCF602M6X35
40	ZCF602M6X40
45	ZCF602M6X45
50	ZCF602M6X50

M8 × 1.25 Thread Size

Length	316 SS Part Number
16	ZCF602M8X16
20	ZCF602M8X20
25	ZCF602M8X25
30	ZCF602M8X30
35	ZCF602M8X35
40	ZCF602M8X40
45	ZCF602M8X45
50	ZCF602M8X50

M10 × 1.5 Thread Size

Length	316 SS Part Number
16	ZCF602M10X16
20	ZCF602M10X20
25	ZCF602M10X25
30	ZCF602M10X30
35	ZCF602M10X35
40	ZCF602M10X40
45	ZCF602M10X45
50	ZCF602M10X50

M12 x 1.75 Thread Size

Length	316 SS Part Number
25	ZCF602M12X25
30	ZCF602M12X30
35	ZCF602M12X35
40	ZCF602M12X40
45	ZCF602M12X45
50	ZCF602M12X50

82° Flat Head Socket Screws — Inch

MADE IN THE USA

Product Information

Designed for light fastening jobs where you need a flush surface. Screws are beveled 82°. All screws have a Class 3A thread fit. Screw length is measured from top of the head. Note: Flat head screws are not designed for higher strength applications.

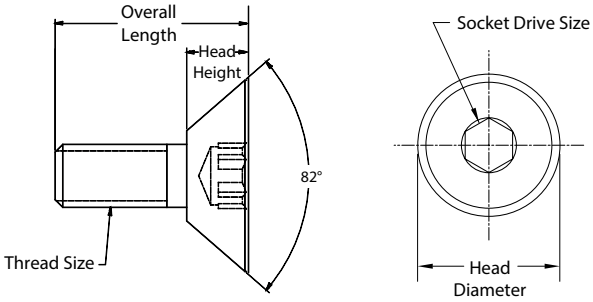

Aluminum

17-4 PH SS

Titanium Grade 2

82° Dimensions Table — Inch

Thread Size	Head Diameter	Head Height	Drive Size
4-40	.255	.083	1/16
6-32	.307	.097	5/64
8-32	.359	.112	3/32
10-32	.411	.127	1/8
1/4-20	.531	.161	5/32
5/16-18	.656	.198	3/16

10-32 Thread Size

Length	Aluminum Part Number	17-4 PH SS Part Number	Titanium Part Number
1/2	ZF72010F08	ZF74410F08	ZF70510F08
3/4	ZF72010F12	ZF74410F12	ZF70510F12
1	ZF72010F16	ZF74410F16	ZF70510F16

6-32 Thread Size

Length	Aluminum Part Number	17-4 PH SS Part Number	Titanium Part Number
3/8	ZF72006C06	ZF74406C06	ZF70506C06
1/2	ZF72006C08	ZF74406C08	ZF70506C08
3/4	ZF72006C12	ZF74406C12	ZF70506C12

1/4-20 Thread Size

Length	Aluminum Part Number	17-4 PH SS Part Number	Titanium Part Number
1/2	ZF72014C08	ZF74414C08	ZF70514C08
3/4	ZF72014C12	ZF74414C12	ZF70514C12
1	ZF72014C16	ZF74414C16	ZF70514C16
1-1/4	ZF72014C20	ZF74414C20	ZF70514C20
1-1/2	ZF72014C24	ZF74414C24	ZF70514C24

8-32 Thread Size

Length	Aluminum Part Number	17-4 PH SS Part Number	Titanium Part Number
3/8	ZF72008C06	ZF74408C06	ZF70508C06
1/2	ZF72008C08	ZF74408C08	ZF70508C08
3/4	ZF72008C12	ZF74408C12	ZF70508C12

5/16-18 Thread Size

Length	Aluminum Part Number	17-4 PH SS Part Number	Titanium Part Number
3/4	ZF72051C12	ZF74451C12	ZF70551C12
1	ZF72051C16	ZF74451C16	ZF70551C16
1-1/2	ZF72051C24	ZF74451C24	ZF70551C24

82° Flat Head Socket Screw — Inch

18-8 SS | Passivated

Product Information

Flat head screws are designed for light-duty fastening applications. They're angled under the head to sit flush within countersunk holes. Flat head screws have a standard 82° bevel. Passivated stainless steel screws provide added protection against oxidation and corrosion. Class 3A thread fit. Length is measured from the top of the head.

Left Hand Threads

4-40 Thread Size

Length	Thread Direction	18-8 SS Part Number
1/4	Left Hand	ZFLH60104C04
1/2	Left Hand	ZFLH60104C08

6-32 Thread Size

Length	Thread Direction	18-8 SS Part Number
1/4	Left Hand	ZFLH60106C04
1/2	Left Hand	ZFLH60106C08

8-32 Thread Size

Length	Thread Direction	18-8 SS Part Number
1/2	Left Hand	ZFLH60108C08
3/4	Left Hand	ZFLH60108C12

10-32 Thread Size

Length	Thread Direction	18-8 SS Part Number
1/2	Left Hand	ZFLH60110F08
3/4	Left Hand	ZFLH60110F12

1/4-20 Thread Size

Length	Thread Direction	18-8 SS Part Number
1/2	Left Hand	ZFLH60114C08
1	Left Hand	ZFLH60114C16

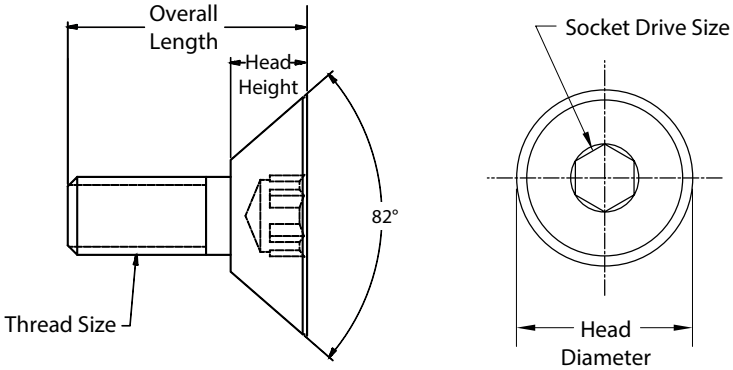

Dimensions Table — Inch

Thread Size	Head Diameter	Head Height	Drive Size
4-40	.255	.083	1/16
6-32	.307	.097	5/64
8-32	.359	.112	3/32
10-32	.411	.127	1/8
1/4-20	.531	.161	5/32
5/16-18	.656	.198	3/16
1/2-13	.938	.251	5/16

Special Sizes

Thread Size x Lg.	Thread Direction	18-8 SS Part Number
6-32 x 3*	Right Hand	ZF60106C48
1/4-20 x 1/4**	Right Hand	ZF60114C04
5/16-18 x 3/8	Right Hand	ZF60151C06
1/2-13 x 5/8	Right Hand	ZF60112C10

** Minimum thread of 3/4 inch*
*** .107 Undercut*

90° Flat Head Socket Screws — Metric

18-8 SS (A2) | Passivated

Product Information

Flat head screws are designed for light-duty fastening applications. They're angled under the head to sit flush within countersunk holes. Metric flat head screws have a standard 90° bevel. Passivated stainless steel screws provide added protection against oxidation and corrosion. Class 6g thread fit. Length is measured from the top of the head.

Dimensions Table — Metric

Thread Size	Head Diameter	Head Height	Drive Size
M3.5 x 0.6mm	7.00	2.00	2
M4.5 x 0.75mm	9.00	2.50	2.5
M6 x 1mm	12.00	3.30	4
M7 x 1mm	14.00	3.85	4.5
M8 x 1.25mm	16.00	4.40	5
M9 x 1.25mm	18.00	5.00	5.5
M10 x 1.5mm	20.00	5.50	6
M11 x 1.5mm	22.00	6.00	6

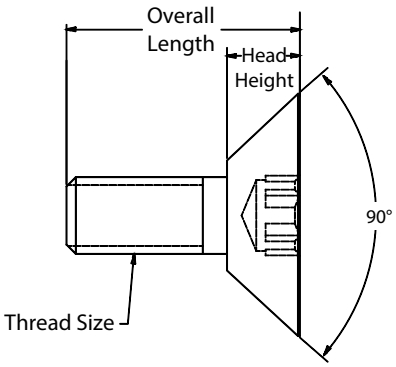

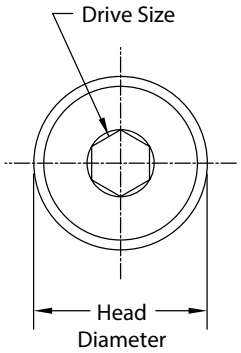

M3.5 x 0.60 Thread Size

Length	18-8 SS Part Number
6	ZF601M3.5X6
8	ZF601M3.5X8
10	ZF601M3.5X10

M4.5 x 0.75 Thread Size

Length	18-8 SS Part Number
8	ZF601M4.5X8
10	ZF601M4.5X10
12	ZF601M4.5X12
16	ZF601M4.5X16
20	ZF601M4.5X20

M6 x 1.00 Thread Size

Length	18-8 SS Part Number
6	ZF601M6X6
12	ZF601M6X12
16	ZF601M6X16
20	ZF601M6X20
25	ZF601M6X25
30	ZF601M6X30

M7 x 1.00 Thread Size

Length	18-8 SS Part Number
16	ZF601M7X16
20	ZF601M7X20
25	ZF601M7X25
30	ZF601M7X30
35	ZF601M7X35

M8 x 1.25 Thread Size

Length	18-8 SS Part Number
8	ZF601M8X8

M9 x 1.25 Thread Size

Length	18-8 SS Part Number
20	ZF601M9X20
25	ZF601M9X25
30	ZF601M9X30

M10 x 1.50 Thread Size

Length	18-8 SS Part Number
12	ZF601M10X12

M11 x 1.50 Thread Size

Length	18-8 SS Part Number
20	ZF601M11X20
25	ZF601M11X25
30	ZF601M11X30

90° Flat Head Left Hand Socket Screws — Metric

18-8 SS (A2) | Passivated

Product Information

Prevent loosening in parts subject to counterclockwise motion. These screws tighten when turned to the left. Flat head screws are designed for light-duty fastening applications. They're angled under the head to sit flush within countersunk holes. Metric flat head screws have a standard 90° bevel. Passivated stainless steel screws provide added protection against oxidation and corrosion. Class 6g thread fit. Length is measured from the top of the head. Screws meet AMPG's internal specifications AMPG 2017 ZF.02.

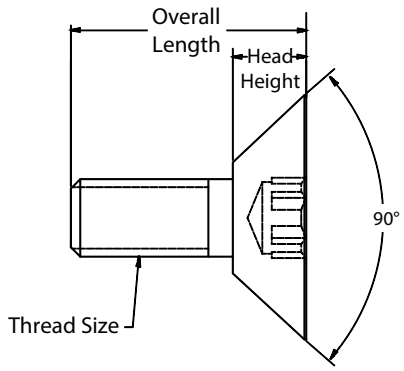

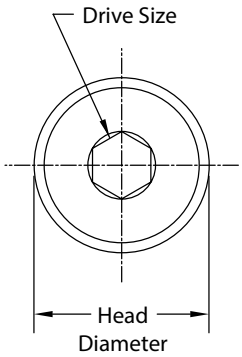

Dimensions Table — Metric			
Thread Size	**Head Diameter**	**Head Height**	**Drive Size**
M3 x 0.5mm	6.00	1.70	2
M4 x 0.7mm	8.00	2.30	2.5
M5 x 0.8mm	10.00	2.80	3
M6 x 1mm	12.00	3.30	4
M8 x 1.25mm	16.00	4.40	5

M3 x 0.5mm Thread Size

Length	18-8 SS Part Number
6	ZFLH601M3X6
10	ZFLH601M3X10

M4 x 0.7mm Thread Size

Length	18-8 SS Part Number
8	ZFLH601M4X8
12	ZFLH601M4X12

M8 x 1.25mm Thread Size

Length	18-8 SS Part Number
16	ZFLH601M8X16
25	ZFLH601M8X25

M5 x 0.8mm Thread Size

Length	18-8 SS Part Number
10	ZFLH601M5X10
16	ZFLH601M5X16

M6 x 1mm Thread Size

Length	18-8 SS Part Number
12	ZFLH601M6X12
20	ZFLH601M6X20

90° Flat Head Socket Screws — Metric

316 SS (A4) | Passivated

Product Information

These metric screws have fine threads with special thread pitches. Flat head screws are designed for light-duty fastening applications. They're angled under the head to sit flush within countersunk holes. Metric flat head screws have a standard 90° bevel. Passivated stainless steel screws provide added protection against oxidation and corrosion. Class 6g thread fit. Length is measured from the top of the head. 316 SS (A4) hex drive screws meet DIN 7991 specifications.

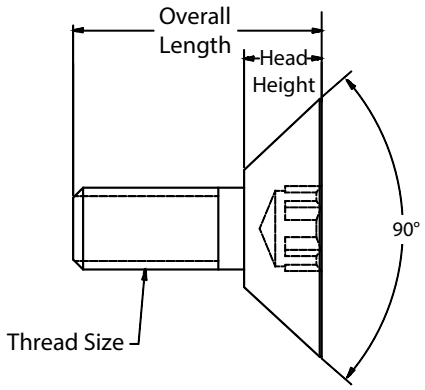

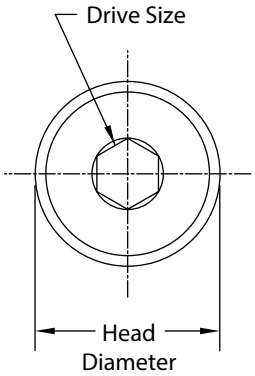

Dimensions Table — Metric, mm			
Thread Size	**Head Diameter**	**Head Height**	**Drive Size**
M3 x 0.35mm	6.00	1.70	2
M4 x 0.5mm	8.00	2.30	2.5
M5 x 0.5mm	10.00	2.80	3
M6 x 0.75mm	12.00	3.30	4
M8 x 1mm	16.00	4.40	5

M3 x 0.35mm Thread Size

Length	316 SS Part Number
6	ZF602M3X6F
8	ZF602M3X8F
10	ZF602M3X10F

M5 x 0.5mm Thread Size

Length	316 SS Part Number
10	ZF602M5X10F
12	ZF602M5X12F
16	ZF602M5X16F

M8 x 1mm Thread Size

Length	316 SS Part Number
16	ZF602M8X16F
20	ZF602M8X20F
25	ZF602M8X25F

M4 x 0.5mm Thread Size

Length	316 SS Part Number
6	ZF602M4X6F
8	ZF602M4X8F
10	ZF602M4X10F

M6 x 0.7mm Thread Size

Length	316 SS Part Number
12	ZF602M6X12F
16	ZF602M6X16F
20	ZF602M6X20F

Low 90° Flat Head Socket Screws — Metric

316 SS (A4) — Hex Drive

Product Information

Flat head screws are designed for light-duty fastening applications. They're angled under the head to sit flush within countersunk holes. These shallow head flat head screws have a standard 90° bevel with a lower head height. Passivated stainless steel screws provide added protection against oxidation and corrosion. Class 6g thread fit. Length is measured from the top of the head.

- AMPG products are made in the USA, precision machined from DFARS compliant material, and lot traceable.
- 316 SS screws meet ASTM A276.
- All stainless steel screws adhere to environmental regulations established by European Union RoHS directive.
- Black oxide gives a dark black oxide surface finish.

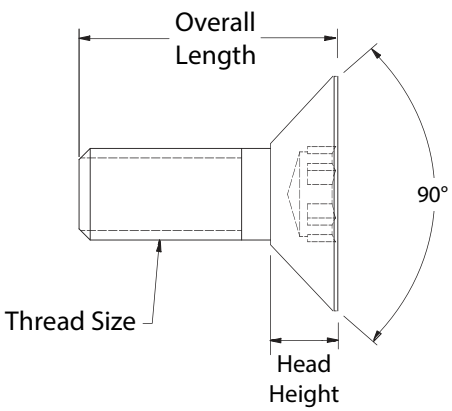

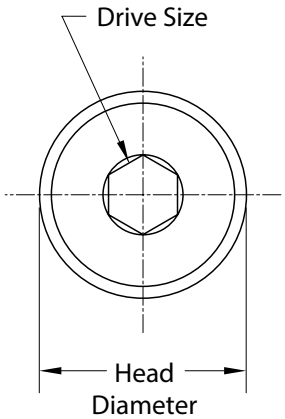

Dimensions Table — Metric, mm			
Thread Size	**Head Diameter**	**Head Height**	**Drive Size**
M3 x 0.5mm	6.00	1.30	2
M4 x 0.7mm	8.00	1.60	2.5
M5 x 0.8mm	10.00	1.90	3
M6 x 1	12.00	2.20	4
M8 x 1.25mm	16.00	2.80	5
M10 x 1.5mm	20.00	3.60	6
M12 x 1.75mm	24.00	4.30	8

Low 90° Flat Head Socket Screws — Metric

316 SS (A4) — Hex Drive

M3 x 0.5mm Thread Size

Length	316 SS Part Number	316 SS, Black Ox. Part Number
4	ZF602M3X4-LOW	ZF602M3X4-LOW-BX
5	ZF602M3X5-LOW	ZF602M3X5-LOW-BX
6	ZF602M3X6-LOW	ZF602M3X6-LOW-BX
8	ZF602M3X8-LOW	ZF602M3X8-LOW-BX
10	ZF602M3X10-LOW	ZF602M3X10-LOW-BX
12	ZF602M3X12-LOW	ZF602M3X12-LOW-BX

M4 x 0.7mm Thread Size

Length	316 SS Part Number	316 SS, Black Ox. Part Number
5	ZF602M4X5-LOW	ZF602M4X5-LOW-BX
6	ZF602M4X6-LOW	ZF602M4X6-LOW-BX
8	ZF602M4X8-LOW	ZF602M4X8-LOW-BX
10	ZF602M4X10-LOW	ZF602M4X10-LOW-BX
12	ZF602M4X12-LOW	ZF602M4X12-LOW-BX
16	ZF602M4X16-LOW	ZF602M4X16-LOW-BX

M5 x 0.8mm Thread Size

Length	316 SS Part Number	316 SS, Black Ox. Part Number
6	ZF602M5X6-LOW	ZF602M5X6-LOW-BX
8	ZF602M5X8-LOW	ZF602M5X8-LOW-BX
10	ZF602M5X10-LOW	ZF602M5X10-LOW-BX
12	ZF602M5X12-LOW	ZF602M5X12-LOW-BX
16	ZF602M5X16-LOW	ZF602M5X16-LOW-BX
20	ZF602M5X20-LOW	ZF602M5X20-LOW-BX

M6 x 1mm Thread Size

Length	316 SS Part Number	316 SS, Black Ox. Part Number
8	ZF602M6X8-LOW	ZF602M6X8-LOW-BX
10	ZF602M6X10-LOW	ZF602M6X10-LOW-BX
12	ZF602M6X12-LOW	ZF602M6X12-LOW-BX
16	ZF602M6X16-LOW	ZF602M6X16-LOW-BX
20	ZF602M6X20-LOW	ZF602M6X20-LOW-BX
25	ZF602M6X25-LOW	ZF602M6X25-LOW-BX
30	ZF602M6X30-LOW	ZF602M6X30-LOW-BX

M8x 1.25mm Thread Size

Length	316 SS Part Number	316 SS, Black Ox. Part Number
10	ZF602M8X10-LOW	ZF602M8X10-LOW-BX
12	ZF602M8X12-LOW	ZF602M8X12-LOW-BX
16	ZF602M8X16-LOW	ZF602M8X16-LOW-BX
20	ZF602M8X20-LOW	ZF602M8X20-LOW-BX
25	ZF602M8X25-LOW	ZF602M8X25-LOW-BX
30	ZF602M8X30-LOW	ZF602M8X30-LOW-BX

M10 x 1.5mm Thread Size

Length	316 SS Part Number	316 SS, Black Ox. Part Number
12	ZF602M10X12-LOW	ZF602M10X12-LOW-BX
16	ZF602M10X16-LOW	ZF602M10X16-LOW-BX
20	ZF602M10X20-LOW	ZF602M10X20-LOW-BX
25	ZF602M10X25-LOW	ZF602M10X25-LOW-BX
30	ZF602M10X30-LOW	ZF602M10X30-LOW-BX

M12 x 1.7mm Thread Size

Length	316 SS Part Number	316 SS, Black Ox. Part Number
20	ZF602M12X20-LOW	ZF602M12X20-LOW-BX
25	ZF602M12X25-LOW	ZF602M12X25-LOW-BX
30	ZF602M12X30-LOW	ZF602M12X30-LOW-BX

82° Flat Head 6-Lobe Drive Screws — Inch

A286 SS | Plain

Product Information

Flat head screws are designed for light-duty fastening applications. They're angled under the head to sit flush within countersunk holes. Flat head screws have a standard 82° bevel. Class 3A thread fit. Length is measured from the top of the head.

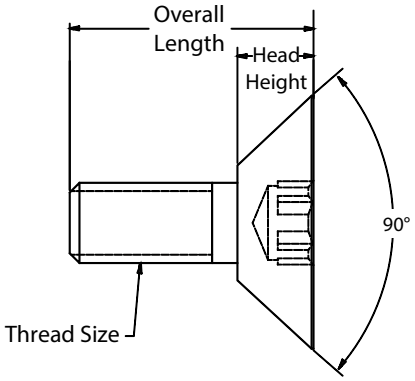

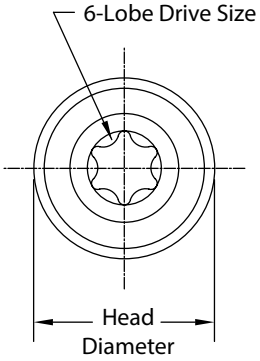

Dimensions Table — Inch

Thread Size	Head Diameter	Head Height	Drive Size
4-40	.255	.083	T8
6-32	.307	.097	T15
8-32	.359	.112	T20
10-32	.411	.127	T25
1/4-20	.531	.161	T30

4-40 Thread Size

Length	A286 Part Number
3/16	ZFT28604C03
1/4	ZFT28604C04
3/8	ZFT28604C06
1/2	ZFT28604C08

6-32 Thread Size

Length	A286 Part Number
1/4	ZFT28606C04
3/8	ZFT28606C06
1/2	ZFT28606C08
3/4	ZFT28606C12

8-32 Thread Size

Length	A286 Part Number
1/4	ZFT28608C04
3/8	ZFT28608C06
1/2	ZFT28608C08
3/4	ZFT28608C12

10-32 Thread Size

Length	A286 Part Number
3/8	ZFT28610F06
1/2	ZFT28610F08
3/4	ZFT28610F12
1	ZFT28610F16

1/4-20 Thread Size

Length	A286 Part Number
1/2	ZFT28614C08
3/4	ZFT28614C12
1	ZFT28614C16
1-1/2	ZFT28614C24

82° Flat Head 6-Lobe Drive Screws — Metric

A286 SS | Plain

Product Information

Flat head screws are designed for light-duty fastening applications. They're angled under the head to sit flush within countersunk holes. Metric flat head screws have a standard 90° bevel. Class 6g thread fit. Length is measured from the top of the head. A286 6-lobe screws meet AMPG's internal specifications of AMPG 2017.ZFT.01.

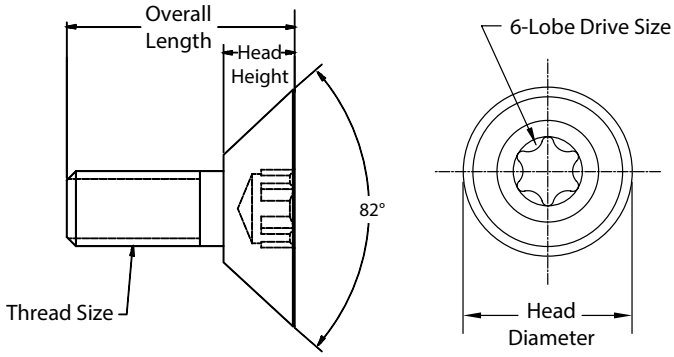

Dimensions Table — Metric, mm			
Thread Size	**Head Diameter**	**Head Height**	**Drive Size**
M3 x 0.5mm	6.40	2.10	T8
M4 x 0.7mm	9.10	2.80	T20
M5 x 0.8mm	10.20	3.20	T25
M6 x 1mm	13.40	4.10	T30
M8 x 1.25mm	16.50	5.00	T40

M3 x 0.5mm Thread Size

Length	A286 SS Part Number
5	ZFT286M3X5
6	ZFT286M3X6
8	ZFT286M3X8
10	ZFT286M3X10
12	ZFT286M3X12

M4x 0.7mm Thread Size

Length	A286 SS Part Number
6	ZFT286M4X6
8	ZFT286M4X8
10	ZFT286M4X10
12	ZFT286M4X12
16	ZFT286M4X16

M5 x 0.8mm Thread Size

Length	A286 SS Part Number
8	ZFT286M5X8
10	ZFT286M5X10
12	ZFT286M5X12
16	ZFT286M5X16
20	ZFT286M5X20

M6 x 1mm Thread Size

Length	A286 SS Part Number
12	ZFT286M6X12
16	ZFT286M6X16
20	ZFT286M6X20
25	ZFT286M6X25
30	ZFT286M6X30

M8 x 1.25mm Thread Size

Length	A286 SS Part Number
16	ZFT286M8X16
20	ZFT286M8X20
25	ZFT286M8X25
30	ZFT286M8X30

100° Flat Head Socket Screws — Inch

18-8 SS | Plain
316 SS | Passivated, Black Oxide
17-4 PH SS | Plain

Product Information

Screws are beveled 100° which provides a larger bearing surface to distribute holding force. These screws perform better than standard 82° flat head screws especially in softer materials. Flat head screws are designed for light-duty fastening applications. They're angled under the head to sit flush within countersunk holes. Class 3A thread fit for Inch sizes and Class 6g thread fit for Metric. Length is measured from the top of the head.

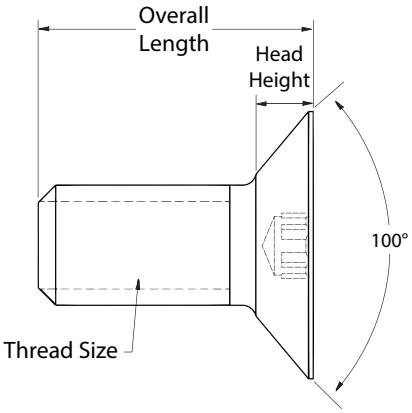

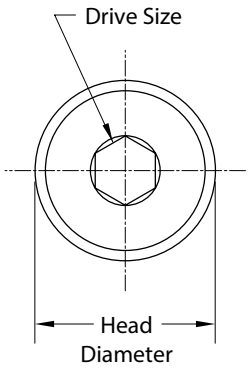

Dimensions Table — Inch

Thread Size	Head Diameter	Head Height	Drive Size
4-40	.255	.059	1/16
6-32	.307	.066	5/64
8-32	.359	.076	5/64
10-24	.411	.084	3/32
10-32	.411	.084	3/32
1/4-20	.531	.105	1/8
5/16-18	.656	.127	5/32
3/8-16	.781	.157	7/32
1/2-13	.937	.181	5/16
5/8-11	1.188	.210	3/8
3/4-10	1.438	.258	1/2

Dimensions Table — Metric

Thread Size	Head Diameter	Head Height	Drive Size
M3 x 0.5mm	6.00	1.30	2
M4 x 0.7mm	8.00	1.60	2.5
M5 x 0.8mm	10.00	1.90	3
M6 x 1mm	12.00	2.20	4
M8 x 1.25mm	16.00	2.80	5
M10 × 1.5mm	20.00	3.5	6
M12 × 1.75mm	50.00	4.2	8

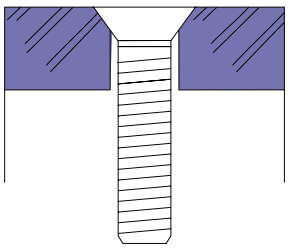

100° Flat Head Socket Screws — Inch

18-8 SS | Plain
316 SS | Passivated, Black Oxide
17-4 PH SS | Plain

4-40 Thread Size

Length	18-8 SS Part Number	316 SS Part Number	316 SS, Black Ox. Part Number	17-4 PH Part Number
3/16	ZHF60104C03	ZHF60204C03	ZHF60204C03-BX	ZHF74404C03
1/4	ZHF60104C04	ZHF60204C04	ZHF60204C04-BX	ZHF74404C04
5/16	ZHF60104C05	ZHF60204C05	ZHF60204C05-BX	ZHF74404C05
3/8	ZHF60104C06	ZHF60204C06	ZHF60204C06-BX	ZHF74404C06
1/2	ZHF60104C08	ZHF60204C08	ZHF60204C08-BX	ZHF74404C08

6-32 Thread Size

Length	18-8 SS Part Number	316 SS Part Number	316 SS, Black Ox. Part Number	17-4 PH Part Number
1/4	ZHF60106C04	ZHF60206C04	ZHF60206C04-BX	ZHF74406C04
5/16	ZHF60106C05	ZHF60206C05	ZHF60206C05-BX	ZHF74406C05
3/8	ZHF60106C06	ZHF60206C06	ZHF60206C06-BX	ZHF74406C06
1/2	ZHF60106C08	ZHF60206C08	ZHF60206C08-BX	ZHF74406C08
5/8	ZHF60106C10	ZHF60206C10	ZHF60206C10-BX	ZHF74406C10
3/4	ZHF60106C12	ZHF60206C12	ZHF60206C12-BX	ZHF74406C12
1	ZHF60106C16	ZHF60206C16	ZHF60206C16-BX	ZHF74406C16

8-32 Thread Size

Length	18-8 SS Part Number	316 SS Part Number	316 SS, Black Ox. Part Number	17-4 PH Part Number
1/4	ZHF60108C04	ZHF60208C04	ZHF60208C04-BX	ZHF74408C04
5/16	ZHF60108C05	ZHF60208C05	ZHF60208C05-BX	ZHF74408C05
3/8	ZHF60108C06	ZHF60208C06	ZHF60208C06-BX	ZHF74408C06
1/2	ZHF60108C08	ZHF60208C08	ZHF60208C08-BX	ZHF74408C08
5/8	ZHF60108C10	ZHF60208C10	ZHF60208C10-BX	ZHF74408C10
3/4	ZHF60108C12	ZHF60208C12	ZHF60208C12-BX	ZHF74408C12
1	ZHF60108C16	ZHF60208C16	ZHF60208C16-BX	ZHF74408C16

10-24 Thread Size

Length	18-8 SS Part Number	316 SS Part Number	316 SS, Black Ox. Part Number	17-4 PH Part Number
3/8	ZHF60110C06	ZHF60210C06	ZHF60210C06-BX	ZHF74410C06
1/2	ZHF60110C08	ZHF60210C08	ZHF60210C08-BX	ZHF74410C08
5/8	ZHF60110C10	ZHF60210C10	ZHF60210C10-BX	ZHF74410C10
3/4	ZHF60110C12	ZHF60210C12	ZHF60210C12-BX	ZHF74410C12
1	ZHF60110C16	ZHF60210C16	ZHF60210C16-BX	ZHF74410C16
1-1/2	ZHF60110C24	ZHF60210C24	ZHF60210C24-BX	ZHF74410C24

Chart continued on next page

100° Flat Head Socket Screws — Inch

18-8 SS | Plain, 316 SS | Passivated, Black Oxide, 17-4 PH SS | Plain

10-32 Thread Size

Length	18-8 SS Part Number	316 SS Part Number	316 SS, Black Ox. Part Number	17-4 PH Part Number
3/8	ZHF60110F06	ZHF60210F06	ZHF60210F06-BX	ZHF74410F06
1/2	ZHF60110F08	ZHF60210F08	ZHF60210F08-BX	ZHF74410F08
5/8	ZHF60110F10	ZHF60210F10	ZHF60210F10-BX	ZHF74410F10
3/4	ZHF60110F12	ZHF60210F12	ZHF60210F12-BX	ZHF74410F12
1	ZHF60110F16	ZHF60210F16	ZHF60210F16-BX	ZHF74410F16
1-1/2	ZHF60110F24	ZHF60210F24	ZHF60210F24-BX	ZHF74410F24

1/4-20 Thread Size

Length	18-8 SS Part Number	316 SS Part Number	316 SS, Black Ox. Part Number	17-4 PH Part Number
3/8	ZHF60114C06	ZHF60214C06	ZHF60214C06-BX	ZHF74414C06
1/2	ZHF60114C08	ZHF60214C08	ZHF60214C08-BX	ZHF74414C08
5/8	ZHF60114C10	ZHF60214C10	ZHF60214C10-BX	ZHF74414C10
3/4	ZHF60114C12	ZHF60214C12	ZHF60214C12-BX	ZHF74414C12
7/8	ZHF60114C14	ZHF60214C14	ZHF60214C14-BX	ZHF74414C14
1	ZHF60114C16	ZHF60214C16	ZHF60214C16-BX	ZHF74414C16
1-1/4	ZHF60114C20	ZHF60214C20	ZHF60214C20-BX	ZHF74414C20
1-1/2	ZHF60114C24	ZHF60214C24	ZHF60214C24-BX	ZHF74414C24
1-3/4	ZHF60114C28	ZHF60214C28	ZHF60214C28-BX	ZHF74414C28
2	ZHF60114C32	ZHF60214C32	ZHF60214C32-BX	ZHF74414C32

5/16-18 Thread Size

Length	18-8 SS Part Number	316 SS Part Number	316 SS, Black Ox. Part Number	17-4 PH Part Number
5/8	ZHF60151C10	ZHF60251C10	ZHF60251C10-BX	ZHF74451C10
3/4	ZHF60151C12	ZHF60251C12	ZHF60251C12-BX	ZHF74451C12
1	ZHF60151C16	ZHF60251C16	ZHF60251C16-BX	ZHF74451C16
1-1/4	ZHF60151C20	ZHF60251C20	ZHF60251C20-BX	ZHF74451C20
1-1/2	ZHF60151C24	ZHF60251C24	ZHF60251C24-BX	ZHF74451C24
1-3/4	ZHF60151C28	ZHF60251C28	ZHF60251C28-BX	ZHF74451C28
2	ZHF60151C32	ZHF60251C32	ZHF60251C32-BX	ZHF74451C32

Chart continued on next page

100° Flat Head Socket Screws — Inch

18-8 SS | Plain, 316 SS | Passivated, Black Oxide, 17-4 PH SS | Plain

3/8-16 Thread Size

Length	18-8 SS Part Number	316 SS Part Number	316 SS, Black Ox. Part Number	17-4 PH Part Number
3/4	ZHF60138C12	ZHF60238C12	ZHF60238C12-BX	ZHF74438C12
1	ZHF60138C16	ZHF60238C16	ZHF60238C16-BX	ZHF74438C16
1-1/4	ZHF60138C20	ZHF60238C20	ZHF60238C20-BX	ZHF74438C20
1-1/2	ZHF60138C24	ZHF60238C24	ZHF60238C24-BX	ZHF74438C24
1-3/4	ZHF60138C28	ZHF60238C28	ZHF60238C28-BX	ZHF74438C28
2	ZHF60138C32	ZHF60238C32	ZHF60238C32-BX	ZHF74438C32
2-1/2	ZHF60138C40	ZHF60238C40	ZHF60238C40-BX	ZHF74438C40
3	ZHF60138C48	ZHF60238C48	ZHF60238C48-BX	ZHF74438C48

1/2-13 Thread Size

Length	18-8 SS Part Number	316 SS Part Number	316 SS, Black Ox. Part Number	17-4 PH Part Number
1	ZHF60112C16	ZHF60212C16	ZHF60212C16-BX	ZHF74412C16
1-1/4	ZHF60112C20	ZHF60212C20	ZHF60212C20-BX	ZHF74412C20
1-1/2	ZHF60112C24	ZHF60212C24	ZHF60212C24-BX	ZHF74412C24
2	ZHF60112C32	ZHF60212C32	ZHF60212C32-BX	ZHF74412C32

5/8-11 Thread Size

Length	18-8 SS Part Number	316 SS Part Number	316 SS, Black Ox. Part Number	17-4 PH Part Number
1-1/2	ZHF60158C24	ZHF60258C24	ZHF60258C24-BX	ZHF74458C24
2	ZHF60158C32	ZHF60258C32	ZHF60258C32-BX	ZHF74458C32
2-1/2	ZHF60158C40	ZHF60258C40	ZHF60258C40-BX	ZHF74458C40
3	ZHF60158C48	ZHF60258C48	ZHF60258C48-BX	ZHF74458C48

3/4-10 Thread Size

Length	18-8 SS Part Number	316 SS Part Number	316 SS, Black Ox. Part Number	17-4 PH Part Number
1-1/2	ZHF60134C24	ZHF60234C24	ZHF60234C24-BX	ZHF74434C24
2	ZHF60134C32	ZHF60234C32	ZHF60234C32-BX	ZHF74434C32
2-1/2	ZHF60134C40	ZHF60234C40	ZHF60234C40-BX	ZHF74434C40
3	ZHF60134C48	ZHF60234C48	ZHF60234C48-BX	ZHF74434C48

100° Flat Head Socket Screws — Metric

316 SS (A4) | Passivated, Black Oxide — Hex Drive

316 SS

316 SS, Black Oxide

Dimensions Table — Metric

Thread Size	Head Diameter	Head Height	Drive Size
M3 x 0.5mm	6.00	1.30	2
M4 x 0.7mm	8.00	1.60	2.5
M5 x 0.8mm	10.00	1.90	3
M6 x 1mm	12.00	2.20	4
M8 x 1.25mm	16.00	2.80	5
M10 × 1.5mm	20.00	3.5	6
M12 × 1.75mm	50.00	4.2	8

M3 x 0.5mm Thread Size

Length	316 SS Part Number	316 SS, Bl Ox. Part Number
5	ZHF602M3X5	ZHF602M3X5-BX
6	ZHF602M3X6	ZHF602M3X6-BX
8	ZHF602M3X8	ZHF602M3X8-BX
10	ZHF602M3X10	ZHF602M3X10-BX
12	ZHF602M3X12	ZHF602M3X12-BX

M4 x 0.7mm Thread Size

Length	316 SS Part Number	316 SS, Bl Ox. Part Number
6	ZHF602M4X6	ZHF602M4X6-BX
8	ZHF602M4X8	ZHF602M4X8-BX
10	ZHF602M4X10	ZHF602M4X10-BX
12	ZHF602M4X12	ZHF602M4X12-BX
16	ZHF602M4X16	ZHF602M4X16-BX

M5 x 0.8mm Thread Size

Length	316 SS Part Number	316 SS, Bl Ox. Part Number
8	ZHF602M5X8	ZHF602M5X8-BX
10	ZHF602M5X10	ZHF602M5X10-BX
12	ZHF602M5X12	ZHF602M5X12-BX
16	ZHF602M5X16	ZHF602M5X16-BX
20	ZHF602M5X20	ZHF602M5X20-BX

M6 x 1mm Thread Size

Length	316 SS Part Number	316 SS, Bl Ox. Part Number
12	ZHF602M6X12	ZHF602M6X12-BX
16	ZHF602M6X16	ZHF602M6X16-BX
20	ZHF602M6X20	ZHF602M6X20-BX
25	ZHF602M6X25	ZHF602M6X25-BX
30	ZHF602M6X30	ZHF602M6X30-BX

M8 x 1.25mm Thread Size

Length	316 SS Part Number	316 SS, Bl Ox. Part Number
16	ZHF602M8X16	ZHF602M8X16-BX
20	ZHF602M8X20	ZHF602M8X20-BX
25	ZHF602M8X25	ZHF602M8X25-BX
30	ZHF602M8X30	ZHF602M8X30-BX

M10 x 1.5mm Thread Size

Length	316 SS Part Number	316 SS, Bl Ox. Part Number
12	ZHF602M10X12	ZHF602M10X12-BX
16	ZHF602M10X16	ZHF602M10X16-BX
20	ZHF602M10X20	ZHF602M10X20-BX
25	ZHF602M10X25	ZHF602M10X25-BX
30	ZHF602M10X30	ZHF602M10X30-BX
35	ZHF602M10X35	ZHF602M10X35-BX
40	ZHF602M10X40	ZHF602M10X40-BX
50	ZHF602M10X50	ZHF602M10X50-BX
60	ZHF602M10X60	ZHF602M10X60-BX
70	ZHF602M10X70	ZHF602M10X70-BX

M12 × 1.75mm Thread Size

Length	316 SS Part Number	316 SS, Bl Ox. Part Number
20	ZHF602M12X20	ZHF602M12X20-BX
25	ZHF602M12X25	ZHF602M12X25-BX
30	ZHF602M12X30	ZHF602M12X30-BX
35	ZHF602M12X35	ZHF602M12X35-BX
40	ZHF602M12X40	ZHF602M12X40-BX
50	ZHF602M12X50	ZHF602M12X50-BX

Wide Head Slotted Machine Screws — Inch

18-8 SS | Passivated
316 SS | Passivated

Product Information

Fit these screws into spaces where head height is important and other wide head screws won't fit. Also known as shutter screws, they have an ultra-wide truss head to distribute the load over a large area for excellent holding pressure. Stainless steel screws are chemical resistant and may be mildly magnetic. All are passivated for added protection against oxidation and corrosion. Thread fit is 2A. Length is measured from under the head. 18-8 SS & 316 SS slotted drive screws meet AMPG's internal specifications AMPG 2016 ZW.01.

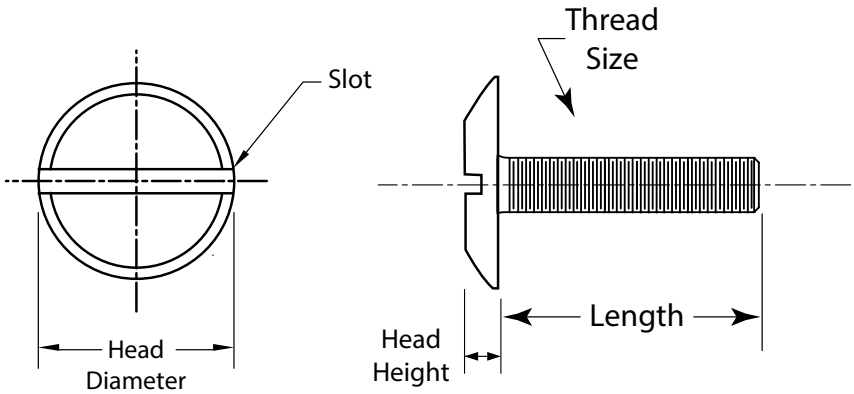

Dimensions Table — Inch		
Thread Size	**Head Diameter** (Max. to Min.)	**Head Height** (Max. to Min)
4-40	.505 - .495	.078 - .068
6-32	.505 - .495	.078 - .068
8-32	.505 - .495	.078 - .068
10-24	.505 - .495	.078 - .068
10-32	.505 - .495	.078 - .068
1/4-20	.755 - .745	.110 - .100
5/16-18	.755 - .745	.110 - .100

For technical drawings and charts, please see page C-76

Wide Head Machine Screws — Inch

MADE IN THE USA

18-8 SS | Passivated
316 SS | Passivated

4-40 Thread Size

Length	18-8 SS Part Number	316 SS Part Number
1/4	ZW1104	ZW3104
3/8	ZW1106	ZW3106
1/2	ZW1108	ZW3108
3/4	ZW1110	ZW3110

6-32 Thread Size

Length	18-8 SS Part Number	316 SS Part Number
1/4	ZW1121	ZW3121
3/8	ZW1123	ZW3123
1/2	ZW1125	ZW3125
3/4	ZW1127	ZW3127
1	ZW1129	ZW3129

8-32 Thread Size

Length	18-8 SS Part Number	316 SS Part Number
1/4	ZW1132	ZW3132
3/8	ZW1134	ZW3134
1/2	ZW1136	ZW3136
3/4	ZW1138	ZW3138
1	ZW1140	ZW3140

10-24 Thread Size

Length	18-8 SS Part Number	316 SS Part Number
1/4	ZW1151	ZW3151
3/8	ZW1153	ZW3153
1/2	ZW1155	ZW3155
3/4	ZW1157	ZW3157
1	ZW1159	ZW3159

10-32 Thread Size

Length	18-8 SS Part Number	316 SS Part Number
1/4	ZW1172	ZW3172
3/8	ZW1174	ZW3174
1/2	ZW1176	ZW3176
3/4	ZW1178	ZW3178
1	ZW1180	ZW3180

1/4-20 Thread Size

Length	18-8 SS Part Number	316 SS Part Number
3/8	ZW1211	ZW3211
1/2	ZW1213	ZW3213
3/4	ZW1217	ZW3217
1	ZW1219	ZW3219
1-1/4	ZW1221	ZW3221
1-1/2	ZW1223	ZW3223
1-3/4	ZW1225	ZW3225
2	ZW1227	ZW3227
2-1/2	ZW1229	ZW3229
3	ZW1231	ZW3231

5/16-18 Thread Size

Length	18-8 SS Part Number	316 SS Part Number
3/4	ZW1244	ZW3244
1	ZW1246	ZW3246

Wide Head Machine Screws — Metric

18-8 SS (A2) | Passivated
316 SS (A4) | Passivated

Product Information

Fit these screws into spaces where head height is important and other wide head screws won't fit. Also known as shutter screws, they have an ultra-wide truss head to distribute the load over a large area for excellent holding pressure. Stainless steel screws are chemical resistant and may be mildly magnetic. All are passivated for added protection against oxidation and corrosion. Thread fit is 6g. Length is measured from under the head. Passivated stainless steel screws provide added protection against oxidation and corrosion.

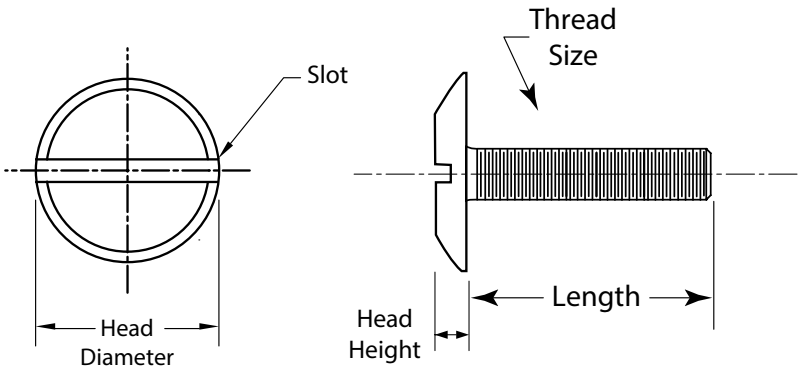

Dimensions Table — Metric, mm		
Thread Size	**Head Diameter** (Max. to Min.)	**Head Height** (Max. to Min)
M3 x 0.5mm	12.80 - 12.50	1.98 - 1.70
M4 x 0.7mm	12.80 - 12.50	1.98 - 1.70
M5 x 0.8mm	12.80 - 12.50	1.98 - 1.70
M6 x 1mm	19.20 - 18.90	2.80 - 2.50

M3 x 0.5mm Thread Size

Length	18-8 SS Part Number	316 SS Part Number
5	ZWM3X5	ZW602M3X5
6	ZWM3X6	ZW602M3X6
8	ZWM3X8	ZW602M3X8
10	ZWM3X10	ZW602M3X10
12	ZWM3X12	ZW602M3X12

M4 x 0.7mm Thread Size

Length	18-8 SS Part Number	316 SS Part Number
6	ZWM4X6	ZW602M4X6
8	ZWM4X8	ZW602M4X8
10	ZWM4X10	ZW602M4X10
12	ZWM4X12	ZW602M4X12
16	ZWM4X16	ZW602M4X16

M5 x 0.8mm Thread Size

Length	18-8 SS Part Number	316 SS Part Number
8	ZWM5X8	ZW602M5X8
10	ZWM5X10	ZW602M5X10
12	ZWM5X12	ZW602M5X12
16	ZWM5X16	ZW602M5X16
20	ZWM5X20	ZW602M5X20

M6 x 1mm Thread Size

Length	18-8 SS Part Number	316 SS Part Number
10	ZWM6X10	ZW602M6X10
12	ZWM6X12	ZW602M6X12
16	ZWM6X16	ZW602M6X16
20	ZWM6X20	ZW602M6X20
25	ZWM6X25	ZW602M6X25

Flanged Button Head Machine Screw — Inch

316 SS | Plain

Product Information

These flange head screws have at least 25% more bearing surface than standard button head machine screws. Each screw is precisely manufactured in one complete operation. The extra-large flange helps to prevent crushing when fastening thin and softer materials. More corrosion resistant than 18-8 stainless steel screws, these 316 stainless steel screws have excellent resistance to chemicals and salt water. Inch screws have a Class 2A thread fit and are fully threaded. Length is measured from under the flange.

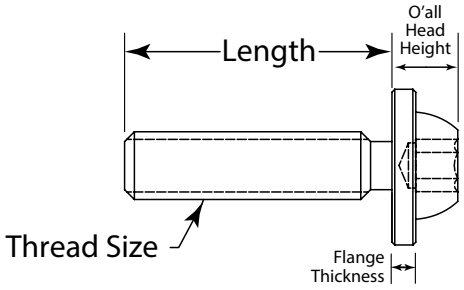

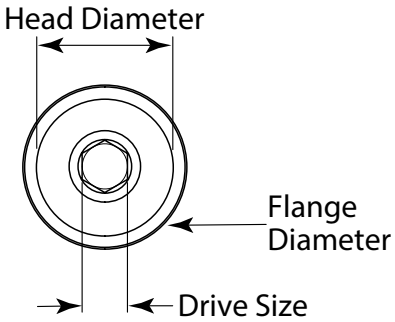

Dimensions Table — Inch

Thread Size	Flange Diameter (Max. to Min.)	Flange Thickness	O'all Head Height	Drive Size
4-40	.344 - .329	.030	.082	1/16
6-32	.406 - .391	.040	.098	5/64
8-32	.484 - .469	.040	.117	3/32
10-24	.500 - .485	.050	.125	1/8
10-32	.500 - .485	.050	.125	1/8
1/4-20	.656 - .641	.050	.156	5/32

4-40 Thread Size

Length	316 SS Part Number
1/4	ZFB106
3/8	ZFB108
1/2	ZFB110
3/4	ZFB113

6-32 Thread Size

Length	316 SS Part Number
3/8	ZFB126
1/2	ZFB128
5/8	ZFB130
3/4	ZFB131
1	ZFB133

8-32 Thread Size

Length	316 SS Part Number
3/8	ZFB176
1/2	ZFB178
5/8	ZFB180
3/4	ZFB181
1	ZFB183

10-24 Thread Size

Length	316 SS Part Number
3/8	ZFB226
1/2	ZFB228
5/8	ZFB230
3/4	ZFB231
1	ZFB233

10-32 Thread Size

Length	316 SS Part Number
3/8	ZFB276
1/2	ZFB278
5/8	ZFB280
3/4	ZFB281
1	ZFB283

1/4-20 Thread Size

Length	316 SS Part Number
1/2	ZFB388
3/4	ZFB391
1	ZFB393
1-1/4	ZFB395
1-1/2	ZFB397

Flanged Button Head Machine Screw — Metric

316 SS (A4) | Plain, Black Oxide

Product Information

These flange head screws have at least 25% more bearing surface than standard button head machine screws. Each screw is precisely manufactured in one complete operation. The extra-large flange helps to prevent crushing when fastening thin and softer materials. More corrosion resistant than 18-8 stainless steel screws, these 316 stainless steel screws have excellent resistance to chemicals and salt water. Inch screws have a Class 6g thread fit and are fully threaded. Length is measured from under the flange.

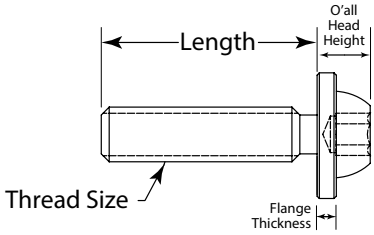

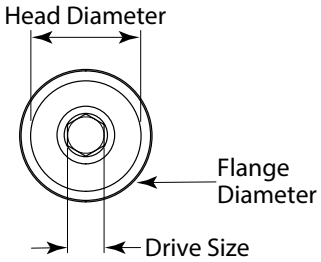

Dimensions Table — Metric

Thread Size	Flange Diameter (Max. to Min.)	Flange Thickness	O'all Head Height	Drive Size
M3.5 x 0.6mm	8.50 - 8.20	.70	2.10	2
M3 x 0.5mm	8.50 - 8.20	.70	2.10	2
M4 x 0.7mm	12.20 - 11.90	1.00	3.00	2.5
M5 x 0.8mm	12.80 - 12.50	1.20	3.20	3
M6 x 1mm	16.70 - 16.20	1.20	3.90	4
M8 x 1.25	21.40	1.60	5.20	5

M3.5 x 0.6mm Thread Size

Length	316 SS Part Number	316 SS, Black Oxide Part Number
6	ZFBM3.5X6	ZFBM3.5X6-BX
8	ZFBM3.5X8	ZFBM3.5X8-BX
10	ZFBM3.5X10	ZFBM3.5X10-BX
12	ZFBM3.5X12	ZFBM3.5X12-BX
14	ZFBM3.5X14	ZFBM3.5X14-BX
16	ZFBM3.5X16	ZFBM3.5X16-BX
20	ZFBM3.5X20	ZFBM3.5X20-BX
25	ZFBM3.5X25	ZFBM3.5X25-BX

M3 x 0.5mm Thread Size

Length	316 SS Part Number	316 SS, Black Oxide Part Number
6	ZFB3X6	ZFB3X6-BX
8	ZFB3X8	ZFB3X8-BX
10	ZFB3X10	ZFB3X10-BX

M4 x 0.7mm Thread Size

Length	316 SS Part Number	316 SS, Black Oxide Part Number
8	ZFB4X8	ZFB4X8-BX
10	ZFB4X10	ZFB4X10-BX
12	ZFB4X12	ZFB4X12-BX
14	ZFB4X14	ZFB4X14-BX
16	ZFB4X16	ZFB4X16-BX
20	ZFB4X20	ZFB4X20-BX
25	ZFB4X25	ZFB4X25-BX

M5 x 0.8mm Thread Size

Length	316 SS Part Number	316 SS, Black Oxide Part Number
6	ZFB5X6	ZFB5X6-BX
8	ZFB5X8	ZFB5X8-BX
10	ZFB5X10	ZFB5X10-BX
12	ZFB5X12	ZFB5X12-BX
16	ZFB5X16	ZFB5X16-BX
20	ZFB5X20	ZFB5X20-BX
25	ZFB5X25	ZFB5X25-BX

M6 x 1mm Thread Size

Length	316 SS Part Number	316 SS, Black Oxide Part Number
12	ZFB6X12	ZFB6X12-BX
14	ZFB6X14	ZFB6X14BX
16	ZFB6X16	ZFB6X16-BX
20	ZFB6X20	ZFB6X20-BX
25	ZFB6X25	ZFB6X25-BX
30	ZFB6X30	ZFB6X30-BX
40	ZFB6X40	ZFB6X40-BX

M8 x 1.25mm Thread Size

Length	316 SS Part Number	316 SS, Black Oxide Part Number
20	ZFB8X20	ZFB8X20-BX
25	ZFB8X25	ZFB8X25-BX
30	ZFB8X30	ZFB8X30-BX
40	ZFB8X40	ZFB8X40-BX

Wide Flange Head Machine Screws — Inch

18-8 SS | Plain
Aluminum | Plain

Product Information

The flange is wider and thicker than other flanged screws, to distribute pressure over a larger surface. Very well adapted for use with thin and soft materials. These ultra-wide flanged button head screws have a built-in washer, to prevent the crushing of thin aluminum and soft plastics, etc. Each screw is precisely manufactured in one complete operation. Screws have a Class 2A thread fit and a low profile button head with a hex socket drive. Head height includes the flange. Length is measured from under the flange.

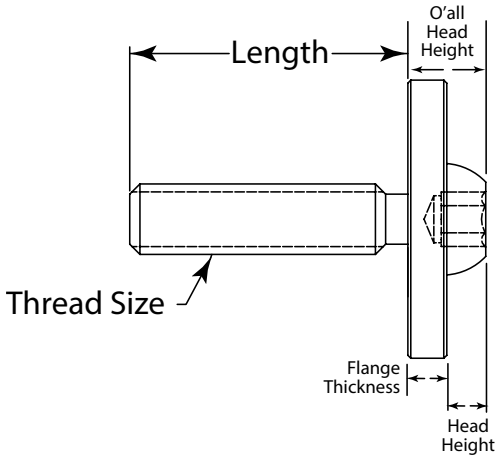

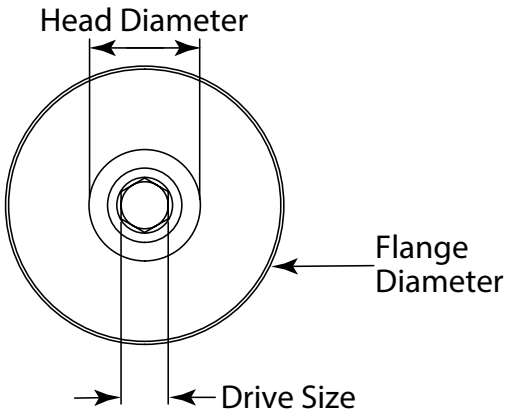

18-8 SS

Aluminum

Dimensions Table — Inch						
Thread Size	**Head Diameter**	**Head Height**	**Flange Thickness**	**O'all Head Height**	**Flange Diameter**	**Drive Size**
4-40	.190	.075	.105	.180	.505	1/16
6-32	.200	.085	.105	.190	.550	5/64
8-32	.250	.085	.105	.190	.650	3/32
10-24	.300	.105	.105	.210	.750	1/8
10-32	.300	.105	.105	.210	.750	1/8
1/4-20	.380	.105	.105	.210	.800	5/32
5/16-18	.380	.105	.105	.210	1.00	3/16

Dimensions Table — Metric, mm						
Thread Size	**Head Diameter**	**Head Height**	**Flange Thickness**	**O'all Head Height**	**Flange Diameter**	**Drive Size**
M3 x 0.5mm	5.00	1.90	2.70	4.60	12.80	2
M4 x 0.7mm	6.40	2.15	2.70	4.85	16.50	2.5
M5 x 0.8mm	7.60	2.60	2.70	5.30	19.10	3
M6 x 1mm	9.70	2.60	2.70	5.30	20.30	4

Wide Flange Head Machine Screws — Inch

18-8 SS | Plain
Aluminum | Plain

4-40 Thread Size

Length	18-8 SS Part Number	Aluminum Part Number
3/16	ZF0090SS	ZF0090
1/4	ZF0091SS	ZF0091
3/8	ZF0094SS	ZF0094
1/2	ZF0096SS	ZF0096
3/4	ZF0098SS	ZF0098

6-32 Thread Size

Length	18-8 SS Part Number	Aluminum Part Number
1/4	ZF0104SS	ZF0104
3/8	ZF0106SS	ZF0106
1/2	ZF0108SS	ZF0108
3/4	ZF0110SS	ZF0110
1	ZF0112SS	ZF0112

8-32 Thread Size

Length	18-8 SS Part Number	Aluminum Part Number
1/4	ZF0118SS	ZF0118
3/8	ZF0120SS	ZF0120
1/2	ZF0124SS	ZF0124
3/4	ZF0128SS	ZF0128
1	ZF0129SS	ZF0129

10-24 Thread Size

Length	18-8 SS Part Number	Aluminum Part Number
1/4	ZF0177SS	ZF0177
3/8	ZF0179SS	ZF0179
1/2	ZF0130SS	ZF0130
3/4	ZF0132SS	ZF0132
1	ZF0134SS	ZF0134

10-32 Thread Size

Length	18-8 SS Part Number	Aluminum Part Number
1/4	ZF0138SS	ZF0138
3/8	ZF0139SS	ZF0139
1/2	ZF0140SS	ZF0140
3/4	ZF0142SS	ZF0142
1	ZF0144SS	ZF0144

1/4-20 Thread Size

Length	18-8 SS Part Number	Aluminum Part Number
3/8	ZF0146SS	ZF0146
1/2	ZF0150SS	ZF0150
3/4	ZF0152SS	ZF0152
1	ZF0154SS	ZF0154
1-1/2	ZF0156SS	ZF0156

5/16-18 Thread Size

Length	18-8 SS Part Number	Aluminum Part Number
1/2	—	ZF0160
3/4	—	ZF0162
1	—	ZF0164
1-1/2	—	ZF0166

Wide Flange Head Machine Screws — Metric

18-8 SS | Plain
Aluminum | Plain

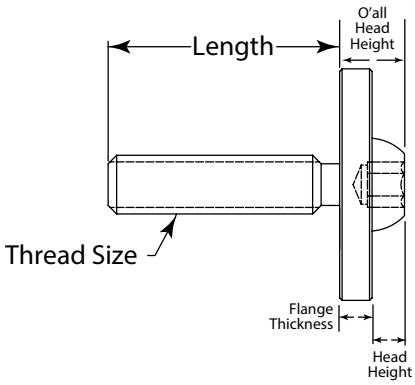

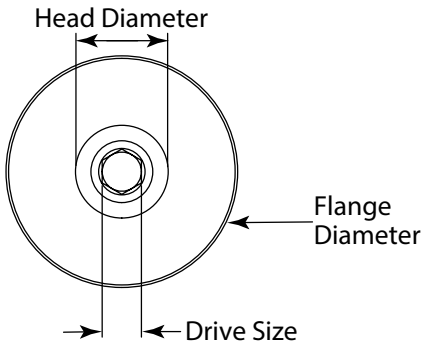

18-8 SS

Aluminum

Dimensions Table — Metric, mm

Thread Size	Head Diameter	Head Height	Flange Thickness	O'all Head Height	Flange Diameter	Drive Size
M3 x 0.5mm	5.00	1.90	2.70	4.60	12.80	2
M4 x 0.7mm	6.40	2.15	2.70	4.85	16.50	2.5
M5 x 0.8mm	7.60	2.60	2.70	5.30	19.10	3
M6 x 1mm	9.70	2.60	2.70	5.30	20.30	4

M3 x 0.5mm Thread Size

Length	18-8 SS Part Number	Aluminum Part Number
5	ZF0M3X5SS	ZF0M3X5
6	ZF0M3X6SS	ZF0M3X6
8	ZF0M3X8SS	ZF0M3X8
10	ZF0M3X10SS	ZF0M3X10
12	ZF0M3X12SS	ZF0M3X12

M4 x 0.7mm Thread Size

Length	18-8 SS Part Number	Aluminum Part Number
6	ZF0M4X6SS	ZF0M4X6
8	ZF0M4X8SS	ZF0M4X8
10	ZF0M4X10SS	ZF0M4X10
12	ZF0M4X12SS	ZF0M4X12
16	ZF0M4X16SS	ZF0M4X16

M5 x 0.8mm Thread Size

Length	18-8 SS Part Number	Aluminum Part Number
8	ZF0M5X8SS	ZF0M5X8
10	ZF0M5X10SS	ZF0M5X10
12	ZF0M5X12SS	ZF0M5X12
16	ZF0M5X16SS	ZF0M5X16
20	ZF0M5X20SS	ZF0M5X20

M6 x 1mm Thread Size

Length	18-8 SS Part Number	Aluminum Part Number
10	ZF0M6X10SS	ZF0M6X10
12	ZF0M6X12SS	ZF0M6X12
16	ZF0M6X16SS	ZF0M6X16
20	ZF0M6X20SS	ZF0M6X20
25	ZF0M6X25SS	ZF0M6X25

Low-Profile External 6-Lobe Flange Screws — Inch

18-8 & 316 H5 SS — External 6-Lobe Drive

Product Information

Also known as External 6-Lobe flange head screws or External Star flange head screws, these fasteners are designed to minimize head height, making them ideal for compact workspaces. Their low-profile drive configuration and flange size allow for installation in tight areas. The underside of the flange distributes force over a larger surface area, eliminating the need for a separate washer. This drive system is perfect for applications demanding high strength and torque in a low-profile head. These fully threaded screws, with head height including flange thickness, ensures high torque transfer without damaging the fastener. These screws feature a Class 2A thread fit.

- AMPG products are made in the USA, precision machined from DFARS compliant material, and lot traceable.
- Corrosion-Resistant 18-8 SS has a Tensile strength of 90,000 psi, Rockwell hardness of B83 and Material spec ASTM A582.
- High-Strength, Superior Corrosion-Resistant 316H5 SS has a Tensile strength of 125,000 psi, Rockwell hardness of C25 and Material spec ASTM A276.
- Made from stainless steel, these screws have good chemical resistance and maybe mildly magnetic.

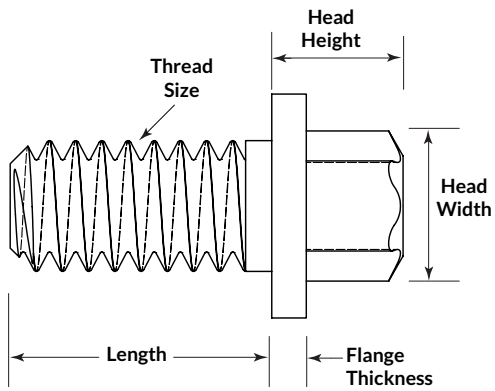

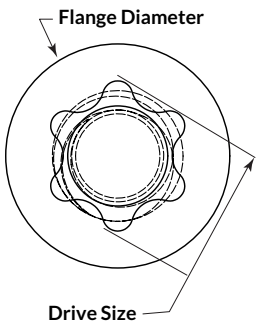

Dimensions Table — Inch					
Thread Size	Head Width (Across Lobe, Nominal)	Head Height (Max. to Min.)	Flange Dia Max (Nominal)	Flange Thickness (Max. to Min.)	Drive Size
6-32	.146	.137 - .127	.270	.047 - .037	E4
8-32	.181	.177 - .167	.310	.051 - .041	E5
10-32	.219	.217 - .207	.350	.067 - .057	E6
1/4-20	.287	.256 - .246	.428	.071 - .061	E8
5/16-18	.362	.323 - .313	.541	.098 - .089	E10
3/8-16	.431	.394 - .384	.663	.126 - .116	E12
1/2-13	.572	.512 - .502	.802	.159 - .149	E16
1/2-20	.572	.512 - .502	.802	.159 - .149	E16
9/16-12	.646	.551 - .541	.863	.165 - .154	E18
5/8-11	.715	.630 - .620	.988	.201 - .189	E20
3/4-10	.860	.788 - .778	1.224	.256 - .244	E24

Low-Profile External 6-Lobe Flange Screws — Inch

18-8 & 316 H5 SS — External 6-Lobe Drive

6-32 Thread Size

Length	18-8 SS Part Number	316 H5 SS Part Number
1/2	ZPE60106C08	ZPE61606C08
3/4	ZPE60106C12	ZPE61606C12

8-32 Thread Size

Length	18-8 SS Part Number	316 H5 SS Part Number
1/2	ZPE60108C08	ZPE61608C08
3/4	ZPE60108C12	ZPE61608C12
1	ZPE60108C16	ZPE61608C16

10-32 Thread Size

Length	18-8 SS Part Number	316 H5 SS Part Number
3/8	ZPE60110FX08	ZPE61610FX08
1/2	ZPE60110FX12	ZPE61610FX12
3/4	ZPE60110FX16	ZPE61610FX16
1	ZPE60110FX24	ZPE61610FX24

1/4-20 Thread Size

Length	18-8 SS Part Number	316 H5 SS Part Number
3/8	ZPE60114C06	ZPE61614C06
1/2	ZPE60114C08	ZPE61614C08
5/8	ZPE60114C10	ZPE61614C10
3/4	ZPE60114C12	ZPE61614C12
1	ZPE60114C16	ZPE61614C16
1-1/4	ZPE60114C20	ZPE61614C20
1-1/2	ZPE60114C24	ZPE61614C24
1-3/4	ZPE60114C28	ZPE61614C28
2	ZPE60114C32	ZPE61614C32
2-1/2	ZPE60114C40	ZPE61614C40
3	ZPE60114C48	ZPE61614C48
3-1/2	ZPE60114C56	ZPE61614C56
4	ZPE60114C64	ZPE61614C64

5/16-18 Thread Size

Length	18-8 SS Part Number	316 H5 SS Part Number
1/2	ZPE60151C08	ZPE61651C08
5/8	ZPE60151C10	ZPE61651C10
3/4	ZPE60151C12	ZPE61651C12
1	ZPE60151C16	ZPE61651C16
1-1/4	ZPE60151C20	ZPE61651C20
1-1/2	ZPE60151C24	ZPE61651C24
1-3/4	ZPE60151C28	ZPE61651C28
2	ZPE60151C32	ZPE61651C32
2-1/2	ZPE60151C40	ZPE61651C40
3	ZPE60151C48	ZPE61651C48
3-1/2	ZPE60151C56	ZPE61651C56
4	ZPE60151C64	ZPE61651C64

3/8-16 Thread Size

Length	18-8 SS Part Number	316 H5 SS Part Number
1/2	ZPE60138C08	ZPE61638C08
5/8	ZPE60138C10	ZPE61638C10
3/4	ZPE60138C12	ZPE61638C12
1	ZPE60138C16	ZPE61638C16
1-1/4	ZPE60138C20	ZPE61638C20
1-1/2	ZPE60138C24	ZPE61638C24
1-3/4	ZPE60138C28	ZPE61638C28
2	ZPE60138C32	ZPE61638C32
2-1/2	ZPE60138C40	ZPE61638C40
3	ZPE60138C48	ZPE61638C48
3-1/2	ZPE60138C56	ZPE61638C56
4	ZPE60138C64	ZPE61638C64

Chart continued on next page

Low-Profile External 6-Lobe Flange Screws — Inch

18-8 & 316 H5 SS — External 6-Lobe Drive

1/2-13 Thread Size

Length	18-8 SS Part Number	316 H5 SS Part Number
1/2	ZPE60112C08	ZPE61612C08
3/4	ZPE60112C12	ZPE61612C12
1	ZPE60112C16	ZPE61612C16
1-1/4	ZPE60112C20	ZPE61612C20
1-1/2	ZPE60112C24	ZPE61612C24
1-3/4	ZPE60112C28	ZPE61612C28
2	ZPE60112C32	ZPE61612C32
2-1/2	ZPE60112C40	ZPE61612C40
3	ZPE60112C48	ZPE61612C48
3-1/2	ZPE60112C56	ZPE61612C56
4	ZPE60112C64	ZPE61612C64

1/2-20 Thread Size

Length	18-8 SS Part Number	316 H5 SS Part Number
1/2	ZPE60112FX08	ZPE61612FX08
3/4	ZPE60112FX12	ZPE61612FX12
1	ZPE60112FX16	ZPE61612FX16
1-1/2	ZPE60112FX24	ZPE61612FX24
2	ZPE60112FX32	ZPE61612FX32
2-1/2	ZPE60112FX40	ZPE61612FX40
3	ZPE60112FX48	ZPE61612FX48
3-1/2	ZPE60112FX56	ZPE61612FX56
4	ZPE60112FX64	ZPE61612FX64

9/16-12 Thread Size

Length	18-8 SS Part Number	316 H5 SS Part Number
1	ZPE60191C16	ZPE61691C16
1-1/2	ZPE60191C24	ZPE61691C24
2	ZPE60191C32	ZPE61691C32
2-1/2	ZPE60191C40	ZPE61691C40
3	ZPE60191C48	ZPE61691C48
3-1/2	ZPE60191C56	ZPE61691C56
4	ZPE60191C64	ZPE61691C64

5/8-11 Thread Size

Length	18-8 SS Part Number	316 H5 SS Part Number
1	ZPE60158C16	ZPE61658C16
1-1/2	ZPE60158C24	ZPE61658C24
2	ZPE60158C32	ZPE61658C32
2-1/2	ZPE60158C40	ZPE61658C40
3	ZPE60158C48	ZPE61658C48
3-1/2	ZPE60158C56	ZPE61658C56
4	ZPE60158C64	ZPE61658C64

3/4-10 Thread Size

Length	18-8 SS Part Number	316 H5 SS Part Number
1	ZPE60134C16	ZPE61634C16
1-1/2	ZPE60134C24	ZPE61634C24
2	ZPE60134C32	ZPE61634C32
2-1/2	ZPE60134C40	ZPE61634C40
3	ZPE60134C48	ZPE61634C48
3-1/2	ZPE60134C56	ZPE61634C56
4	ZPE60134C64	ZPE61634C64

Low-Profile External 6-Lobe Flange Screws — Metric

18-8 & 316 H5 SS — External 6-Lobe Drive

Product Information

Also known as External 6-Lobe flange head screws or External Star flange head screws, these fasteners are designed to minimize head height, making them ideal for compact workspaces. Their low-profile drive configuration and flange size allow for installation in tight areas. The underside of the flange distributes force over a larger surface area, eliminating the need for a separate washer. This drive system is perfect for applications demanding high strength and torque in a low-profile head. These fully threaded screws, with head height including flange thickness, ensures high torque transfer without damaging the fastener. These screws feature a Class 6g thread fit.

- AMPG products are made in the USA, precision machined from DFARS compliant material, and lot traceable.
- Screws meet specifications of DIN 34800-2022.
- Corrosion-Resistant 18-8 SS has a Tensile strength of 90,000 psi, Rockwell hardness of B83 and Material spec ASTM A582.
- High-Strength, Superior Corrosion-Resistant 316H5 SS has a Tensile strength of 125,000 psi, Rockwell hardness of C25 and Material spec ASTM A276.
- Made from stainless steel, these screws have good chemical resistance and maybe mildly magnetic.

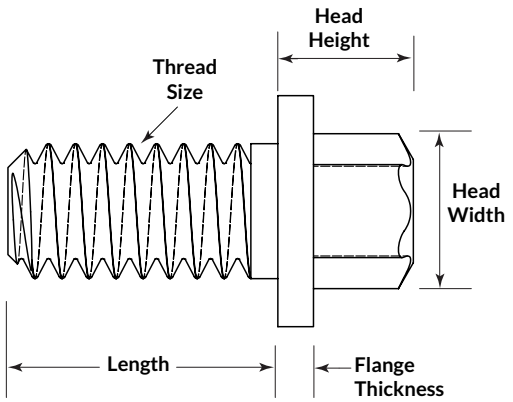

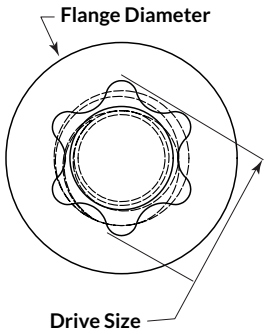

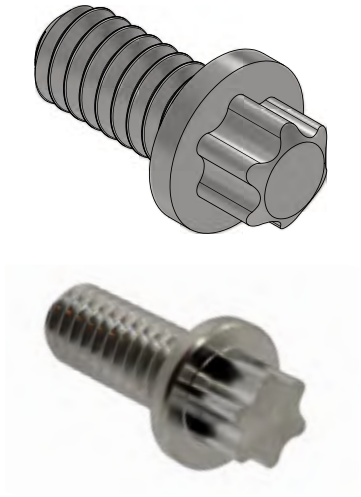

Dimensions Table — Metric					
Thread Size	**Head Width** (Across Lobe, Nominal)	**Head Height** (Max. to Min.)	**Flange Dia Max** (Nominal)	**Flange Thickness** (Max. to Min.)	**Drive Size**
M4 x 0.7	4.60	4.50 - 4.25	7.88	1.30 - 1.05	E5
M5 x 0.8	5.55	5.50 - 5.25	8.88	1.70 - 1.45	E6
M6 x 1	7.30	6.50 - 6.25	10.88	1.80 - 1.55	E8
M8 x 1.25	9.20	8.20 - 7.95	13.73	2.50 - 2.25	E10
M10 x 1.5	10.95	10.00 - 9.75	16.83	3.20 - 2.95	E12
M12 x 1.75	12.65	12.00 - 11.75	18.83	3.90 - 3.60	E14

Low-Profile External 6-Lobe Flange Screws — Metric

18-8 & 316 H5 SS — External 6-Lobe Drive

M4 x 0.7 Thread Size

Length	18-8 SS Part Number	316 H5 SS Part Number
8	ZPE601M4CX8	ZPE616M4CX8
12	ZPE601M4CX12	ZPE616M4CX12
25	ZPE601M4CX25	ZPE616M4CX25

M5 x 0.8 Thread Size

Length	18-8 SS Part Number	316 H5 SS Part Number
8	ZPE601M5CX8	ZPE616M5CX8
12	ZPE601M5CX12	ZPE616M5CX12
20	ZPE601M5CX20	ZPE616M5CX20
25	ZPE601M5CX25	ZPE616M5CX25

M6 x 1 Thread Size

Length	18-8 SS Part Number	316 H5 SS Part Number
10	ZPE601M6CX10	ZPE616M6CX10
12	ZPE601M6CX12	ZPE616M6CX12
16	ZPE601M6CX16	ZPE616M6CX16
20	ZPE601M6CX20	ZPE616M6CX20
25	ZPE601M6CX25	ZPE616M6CX25
30	ZPE601M6CX30	ZPE616M6CX30
35	ZPE601M6CX35	ZPE616M6CX35
40	ZPE601M6CX40	ZPE616M6CX40
50	ZPE601M6CX50	ZPE616M6CX50
75	ZPE601M6CX75	ZPE616M6CX75
100	ZPE601M6CX100	ZPE616M6CX100

M8x 1.25 Thread Size

Length	18-8 SS Part Number	316 H5 SS Part Number
12	ZPE601M8CX12	ZPE616M8CX12
16	ZPE601M8CX16	ZPE616M8CX16
20	ZPE601M8CX20	ZPE616M8CX20
25	ZPE601M8CX25	ZPE616M8CX25
30	ZPE601M8CX30	ZPE616M8CX30
35	ZPE601M8CX35	ZPE616M8CX35
40	ZPE601M8CX40	ZPE616M8CX40
50	ZPE601M8CX50	ZPE616M8CX50
75	ZPE601M8CX75	ZPE616M8CX75
100	ZPE601M8CX100	ZPE616M8CX100

M10 x 1.5 Thread Size

Length	18-8 SS Part Number	316 H5 SS Part Number
12	ZPE601M10CX12	ZPE616M10CX12
16	ZPE601M10CX16	ZPE616M10CX16
20	ZPE601M10CX20	ZPE616M10CX20
25	ZPE601M10CX25	ZPE616M10CX25
30	ZPE601M10CX30	ZPE616M10CX30
35	ZPE601M10CX35	ZPE616M10CX35
40	ZPE601M10CX40	ZPE616M10CX40
50	ZPE601M10CX50	ZPE616M10CX50
75	ZPE601M10CX75	ZPE616M10CX75
100	ZPE601M10CX100	ZPE616M10CX100

M12 x 1.75 Thread Size

Length	18-8 SS Part Number	316 H5 SS Part Number
12	ZPE601M12CX12	ZPE616M12CX12
20	ZPE601M12CX20	ZPE616M12CX20
25	ZPE601M12CX25	ZPE616M12CX25
30	ZPE601M12CX30	ZPE616M12CX30
35	ZPE601M12CX35	ZPE616M12CX35
40	ZPE601M12CX40	ZPE616M12CX40
45	ZPE601M12CX45	ZPE616M12CX45
50	ZPE601M12CX50	ZPE616M12CX50
65	ZPE601M12CX65	ZPE616M12CX65
75	ZPE601M12CX75	ZPE616M12CX75
90	ZPE601M12CX90	ZPE616M12CX90
100	ZPE601M12CX100	ZPE616M12CX100

18-8 SS,316 SS,
316 H5 SS,
17-4 PH SS, Alum

Hex Head Cap Screws — Inch

MADE IN THE USA

18-8 SS | Plain | Black Oxide
316 SS | Plain | Black Oxide
Brass | Plain
17-4 PH SS | Plain
316 H5 SS | Plain
A286 SS | Plain
Aluminum | Plain | Black Anodized

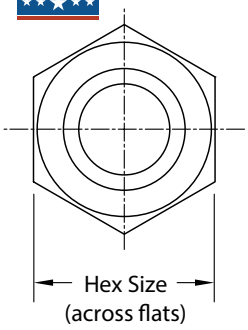

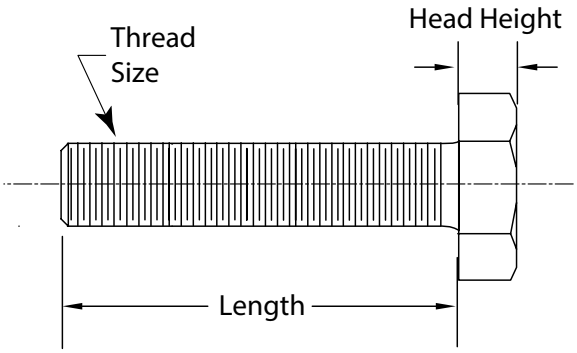

Product Information

A hex head bolt is a type of bolt characterized by its six-sided head, which is specifically designed to be tightened or loosened with a wrench or socket. These versatile bolts are widely used in a variety of applications, particularly in situations where strong clamping forces are essential. Their robust design and ease of installation make them a popular choice for everything from construction and automotive uses to machinery and general fastening needs. Fully threaded hex head screws can be screwed all the way into a threaded or tapped hole. Partially threaded hex head screws have an unthreaded portion under the head that adds strength but prevents them from being screwed all the way into a threaded hole. Screws have a Class 2A thread fit. These screws meet ASME B18.6.3-2013 and ASME B18.2.1 depending on the material.

18-8 SS

18-8 SS, Black Oxide

316 SS

316 SS, Black Oxide

Brass

17-4 PH SS

316 H5 SS

A286 SS

Aluminum

Aluminum, Black Anodized

Dimensions Table — Inch

Thread Size	Hex Size Across Flats	Head Height
2-56	1/8	1/16
4-40	3/16	1/16
6-32	1/4	3/32
8-32	1/4	7/64
10-24	5/16	1/8
10-32	5/16	1/8
12-24	5/16	5/32
1/4-20	7/16	5/32
1/4-28	7/16	5/32
5/16-18	1/2	13/64
5/16-24	1/2	13/64
3/8-16	9/16	15/64
3/8-24	9/16	15/64
7/16-14	5/8	9/32
7/16-20	5/8	9/32
1/2-13	3/4	5/16
1/2-20	3/4	5/16
9/16-12	13/16	23/64
9/16-18	13/16	23/64
5/8-11	15/16	25/64
5/8-18	15/16	25/64
3/4-10	1-1/8	15/32
3/4-16	1-1/8	15/32
7/8-9	1-5/16	35/64
7/8-14	1-5/16	35/64
1-8	1-1/2	39/64
1-14	1-1/2	39/64
1 1/8-7	1-11/16	11/16
1 1/4-7	1-7/8	25/32
1 3/8-6	2-1/16	27/32
1 1/2-6	2-1/4	15/16

Hex Head Cap Screws — Inch

18-8 SS | Plain | Black Oxide

4-40 Thread Size

Length	Full or Partial Threads	18-8 SS Part Number	18-8 SS, Bl Ox Part Number
3/16	Full	ZH60104C03	ZH60104C03-BX
1/4	Full	ZH60104C04	ZH60104C04-BX
5/16	Full	ZH60104C05	ZH60104C05-BX
3/8	Full	ZH60104C06	ZH60104C06-BX
1/2	Full	ZH60104C08	ZH60104C08-BX
5/8	Full	ZH60104C10	ZH60104C10-BX
3/4	Full	ZH60104C12	ZH60104C12-BX
1	Full	ZH60104C16	ZH60104C16-BX

6-32 Thread Size

Length	Full or Partial Threads	18-8 SS Part Number	18-8 SS, Bl Ox Part Number
1/4	Full	ZH60106C04	ZH60106C04-BX
5/16	Full	ZH60106C05	ZH60106C05-BX
3/8	Full	ZH60106C06	ZH60106C06-BX
1/2	Full	ZH60106C08	ZH60106C08-BX
5/8	Full	ZH60106C10	ZH60106C10-BX
3/4	Full	ZH60106C12	ZH60106C12-BX
1	Full	ZH60106C16	ZH60106C16-BX
1-1/4	Full	ZH60106C20	ZH60106C20-BX
1-1/2	Full	ZH60106C24	ZH60106C24-BX

8-32 Thread Size

Length	Full or Partial Threads	18-8 SS Part Number	18-8 SS, Bl Ox Part Number
1/4	Full	ZH60108C04	ZH60108C04-BX
5/16	Full	ZH60108C05	ZH60108C05-BX
3/8	Full	ZH60108C06	ZH60108C06-BX
1/2	Full	ZH60108C08	ZH60108C08-BX
5/8	Full	ZH60108C10	ZH60108C10-BX
3/4	Full	ZH60108C12	ZH60108C12-BX
7/8	Full	ZH60108C14	ZH60108C14-BX
1	Full	ZH60108C16	ZH60108C16-BX
1-1/4	Full	ZH60108C20	ZH60108C20-BX
1-1/2	Full	ZH60108C24	ZH60108C24-BX
2	Full	ZH60108C32	ZH60108C32-BX

10-24 Thread Size

Length	Full or Partial Threads	18-8 SS Part Number	18-8 SS, Bl Ox Part Number
1/4	Full	ZH60110C04	ZH60110C04-BX
5/16	Full	ZH60110C05	ZH60110C05-BX
3/8	Full	ZH60110C06	ZH60110C06-BX
1/2	Full	ZH60110C08	ZH60110C08-BX
5/8	Full	ZH60110C10	ZH60110C10-BX
3/4	Full	ZH60110C12	ZH60110C12-BX
7/8	Full	ZH60110C14	ZH60110C14-BX
1	Full	ZH60110C16	ZH60110C16-BX
1-1/4	Full	ZH60110C20	ZH60110C20-BX
1-1/2	Full	ZH60110C24	ZH60110C24-BX
2	Full	ZH60110C32	ZH60110C32-BX
2-1/2	1.5 min	ZH60110C40-1.5	ZH60110C40-1.5-BX
3	1.5 min	ZH60110C48-1.5	ZH60110C48-1.5-BX

10-32 Thread Size

Length	Full or Partial Threads	18-8 SS Part Number	18-8 SS, Bl Ox Part Number
1/4	Full	ZH60110F04	ZH60110F04-BX
5/16	Full	ZH60110F05	ZH60110F05-BX
3/8	Full	ZH60110F06	ZH60110F06-BX
1/2	Full	ZH60110F08	ZH60110F08-BX
5/8	Full	ZH60110F10	ZH60110F10-BX
3/4	Full	ZH60110F12	ZH60110F12-BX
7/8	Full	ZH60110F14	ZH60110F14-BX
1	Full	ZH60110F16	ZH60110F16-BX
1-1/4	Full	ZH60110F20	ZH60110F20-BX
1-1/2	Full	ZH60110F24	ZH60110F24-BX
1-3/4	Full	ZS61510F28	ZS61510F28-BX
2	Full	ZH60110F32	ZH60110F32-BX
2-1/2	1-1/2	ZH60110F40-1.5	ZH60110F40-1.5-BX
3	1-1/2	ZH60110F48-1.5	ZH60110F48-1.5-BX

12-24 Thread Size

Length	Full or Partial Threads	18-8 SS Part Number	18-8 SS, Bl Ox Part Number
1/2	Full	ZH601#12C08	ZH601#12C08-BX
5/8	Full	ZH601#12C10	ZH601#12C10-BX
3/4	Full	ZH601#12C12	ZH601#12C12-BX
1	Full	ZH601#12C16	ZH601#12C16-BX

Hex Head Cap Screws — Inch

18-8 SS | Plain | Black Oxide

1/4-20 Thread Size

Length	Full or Partial Threads	18-8 SS Part Number	18-8 SS, Bl Ox Part Number
3/8	Full	ZH60114C06	ZH60114C06-BX
7/16	Full	ZH60114C07	ZH60114C07-BX
1/2	Full	ZH60114C08	ZH60114C08-BX
9/16	Full	ZH60114C09	ZH60114C09-BX
5/8	Full	ZH60114C10	ZH60114C10-BX
3/4	Full	ZH60114C12	ZH60114C12-BX
7/8	Full	ZH60114C14	ZH60114C14-BX
1	Full	ZH60114C16	ZH60114C16-BX
1-1/8	Full	ZH60114C18	ZH60114C18-BX
1-1/4	Full	ZH60114C20	ZH60114C20-BX
1-1/4	3/4 Min	ZH60114C20-0.75	ZH60114C20-0.75-BX
1-3/8	Full	ZH60114C22	ZH60114C22-BX
1-3/8	3/4 Min	ZH60114C22-0.75	ZH60114C22-0.75-BX
1-1/2	Full	ZH60114C24	ZH60114C24-BX
1-1/2	3/4 Min	ZH60114C24-0.75	ZH60114C24-0.75-BX
1-5/8	Full	ZH60114C26	ZH60114C26-BX
1-5/8	3/4 Min	ZH60114C26-0.75	ZH60114C26-0.75-BX
1-3/4	Full	ZH60114C28	ZH60114C28-BX
1-3/4	3/4 Min	ZH60114C28-0.75	ZH60114C28-0.75-BX
1-7/8	Full	ZH60114C30	ZH60114C30-BX
2	Full	ZH60114C32	ZH60114C32-BX
2	3/4 Min	ZH60114C32-0.75	ZH60114C32-0.75-BX
2-1/4	Full	ZH60114C36	ZH60114C36-BX
2-1/4	3/4 Min	ZH60114C36-0.75	ZH60114C36-0.75-BX
2-3/8	3/4 Min	ZH60114C38-0.75	ZH60114C38-0.75-BX
2-1/2	Full	ZH60114C40	ZH60114C40-BX
2-1/2	3/4 Min	ZH60114C40-0.75	ZH60114C40-0.75-BX
2-3/4	Full	ZH60114C44	ZH60114C44-BX
2-3/4	3/4 Min	ZH60114C44-0.75	ZH60114C44-0.75-BX
3	Full	ZH60114C48	ZH60114C48-BX
3	3/4 Min	ZH60114C48-0.75	ZH60114C48-0.75-BX
3-1/4	Full	ZH60114C52	ZH60114C52-BX
3-1/4	3/4 Min	ZH60114C52-0.75	ZH60114C52-0.75-BX

1/4-20 Thread Size

Length	Full or Partial Threads	18-8 SS Part Number	18-8 SS, Bl Ox Part Number
3-1/2	Full	ZH60114C56	ZH60114C56-BX
3-1/2	3/4 Min	ZH60114C56-0.75	ZH60114C56-0.75-BX
3-3/4	Full	ZH60114C60	ZH60114C60-BX
3-3/4	3/4 Min	ZH60114C60-0.75	ZH60114C60-0.75-BX
4	Full	ZH60114C64	ZH60114C64-BX
4	3/4 Min	ZH60114C64-0.75	ZH60114C64-0.75-BX
4-1/4	Full	ZH60114C68	ZH60114C68-BX
4-1/4	3/4 Min	ZH60114C68-0.75	ZH60114C68-0.75-BX
4-3/8	3/4 Min	ZH60114C70	ZH60114C70-BX
4-3/8	3/4 Min	ZH60114C70-0.75	ZH60114C70-0.75-BX
4-1/2	Full	ZH60114C72	ZH60114C72-BX
4-1/2	3/4 Min	ZH60114C72-0.75	ZH60114C72-0.75-BX
4-3/4	Full	ZH60114C76	ZH60114C76-BX
4-3/4	3/4 Min	ZH60114C76-0.75	ZH60114C76-0.75-BX
4-7/8	Full	ZH60114C78	ZH60114C78-BX
4-7/8	3/4 Min	ZH60114C78-0.75	ZH60114C78-0.75-BX
5	Full	ZH60114C80	ZH60114C80-BX
5	3/4 Min	ZH60114C80-0.75	ZH60114C80-0.75-BX
5-1/2	Full	ZH60114C88	ZH60114C88-BX
5-1/2	3/4 Min	ZH60114C88-0.75	ZH60114C88-0.75-BX
6	3/4 Min	ZH60114C96-0.75	ZH60114C96-0.75-BX
6-1/2	1 Min	ZH60114C104-1	ZH60114C104-1-BX
7	1 Min	ZH60114C112-1	ZH60114C112-1-BX
7-1/2	1 Min	ZH60114C120-1	ZH60114C120-1-BX
8	1 Min	ZH60114C128-1	ZH60114C128-1-BX

Hex Head Cap Screws — Inch

18-8 SS | Plain | Black Oxide

1/4-28 Thread Size

Length	Full or Partial Threads	18-8 SS Part Number	18-8 SS, Bl Ox Part Number
3/8	Full	ZH60114F06	ZH60114F06-BX
1/2	Full	ZH60114F08	ZH60114F08-BX
5/8	Full	ZH60114F10	ZH60114F10-BX
3/4	Full	ZH60114F12	ZH60114F12-BX
7/8	Full	ZH60114F14	ZH60114F14-BX
1	Full	ZH60114F16	ZH60114F16-BX
1-1/8	Full	ZH60114F18	ZH60114F18-BX
1-1/4	Full	ZH60114F20	ZH60114F20-BX
1-1/4	3/4 Min	ZH60114F20-0.75	ZH60114F20-0.75-BX
1-3/8	Full	ZH60114F22	ZH60114F22-BX
1-1/2	Full	ZH60114F24	ZH60114F24-BX
1-1/2	3/4 Min	ZH60114F24-0.75	ZH60114F24-0.75-BX
1-3/4	Full	ZH60114F28	ZH60114F28-BX
1-3/4	3/4 Min	ZH60114F28-0.75	ZH60114F28-0.75-BX
2	Full	ZH60114F32	ZH60114F32-BX
2	3/4 Min	ZH60114F32-0.75	ZH60114F32-0.75-BX
2-1/4	Full	ZH60114F36	ZH60114F36-BX
2-1/4	3/4 Min	ZH60114F36-0.75	ZH60114F36-0.75-BX
2-1/2	Full	ZH60114F40	ZH60114F40-BX
2-1/2	3/4 Min	ZH60114F40-0.75	ZH60114F40-0.75-BX
2-3/4	Full	ZH60114F44	ZH60114F44-BX
2-3/4	3/4 Min	ZH60114F44-0.75	ZH60114F44-0.75-BX
3	Full	ZH60114F48	ZH60114F48-BX
3	3/4 Min	ZH60114F48-0.75	ZH60114F48-0.75-BX
3-1/4	3/4 Min	ZH60114F52-0.75	ZH60114F52-0.75-BX
3-1/2	Full	ZH60114F56	ZH60114F56-BX
3-1/2	3/4 Min	ZH60114F56-0.75	ZH60114F56-0.75-BX
3-3/4	3/4 Min	ZH60114F60-0.75	ZH60114F60-0.75-BX
4	Full	ZH60114F64	ZH60114F64-BX
4	3/4 Min	ZH60114F64-0.75	ZH60114F64-0.75-BX
4-1/2	3/4 Min	ZH60114F72-0.75	ZH60114F72-0.75-BX
5	3/4 Min	ZH60114F80-0.75	ZH60114F80-0.75-BX
5-1/2	3/4 Min	ZH60114F88-0.75	ZH60114F88-0.75-BX
6	3/4 Min	ZH60114F96-0.75	ZH60114F96-0.75-BX

5/16-18 Thread Size

Length	Full or Partial Threads	18-8 SS Part Number	18-8 SS, Bl Ox Part Number
3/8	Full	ZH60151C06	ZH60151C06-BX
1/2	Full	ZH60151C08	ZH60151C08-BX
9/16	Full	ZH60151C09	ZH60151C09-BX
5/8	Full	ZH60151C10	ZH60151C10-BX
3/4	Full	ZH60151C12	ZH60151C12-BX
7/8	Full	ZH60151C14	ZH60151C14-BX
1	Full	ZH60151C16	ZH60151C16-BX
1-1/8	Full	ZH60151C18	ZH60151C18-BX
1-1/4	Full	ZH60151C20	ZH60151C20-BX
1-3/8	7/8 Min	ZH60151C22-0.875	ZH60151C22-0.875-BX
1-1/2	Full	ZH60151C24	ZH60151C24-BX
1-1/2	7/8 Min	ZH60151C24-0.875	ZH60151C24-0.875-BX
1-5/8	Full	ZH60151C26	ZH60151C26-BX
1-5/8	7/8 Min	ZH60151C26-0.875	ZH60151C26-0.875-BX
1-3/4	Full	ZH60151C28	ZH60151C28-BX
1-3/4	7/8 Min	ZH60151C28-0.875	ZH60151C28-0.875-BX
1-7/8	Full	ZH60151C30	ZH60151C30-BX
1-7/8	7/8 Min	ZH60151C30-0.875	ZH60151C30-0.875-BX
2	Full	ZH60151C32	ZH60151C32-BX
2	7/8 Min	ZH60151C32-0.875	ZH60151C32-0.875-BX
2-1/4	Full	ZH60151C36	ZH60151C36-BX
2-1/4	7/8 Min	ZH60151C36-0.875	ZH60151C36-0.875-BX
2-1/2	Full	ZH60151C40	ZH60151C40-BX
2-1/2	7/8 Min	ZH60151C40-0.875	ZH60151C40-0.875-BX
2-3/4	Full	ZH60151C44	ZH60151C44-BX
2-3/4	7/8 Min	ZH60151C44-0.875	ZH60151C44-0.875-BX
3	Full	ZH60151C48	ZH60151C48-BX
3	7/8 Min	ZH60151C48-0.875	ZH60151C48-0.875-BX
3-1/4	Full	ZH60151C52	ZH60151C52-BX
3-1/4	7/8 Min	ZH60151C52-0.875	ZH60151C52-0.875-BX
3-1/2	Full	ZH60151C56	ZH60151C56-BX
3-1/2	7/8 Min	ZH60151C56-0.875	ZH60151C56-0.875-BX
3-3/4	Full	ZH60151C60	ZH60151C60-BX
3-3/4	7/8 Min	ZH60151C60-0.875	ZH60151C60-0.875-BX

Hex Head Cap Screws — Inch

18-8 SS | Plain | Black Oxide

5/16-18 Thread Size

Length	Full or Partial Threads	18-8 SS Part Number	18-8 SS, Bl Ox Part Number
4	Full	ZH60151C64	ZH60151C64-BX
4	7/8 Min	ZH60151C64-0.875	ZH60151C64-0.875-BX
4-1/4	7/8 Min	ZH60151C68-0.875	ZH60151C68-0.875-BX
4-1/2	Full	ZH60151C72	ZH60151C72-BX
4-1/2	7/8 Min	ZH60151C72-0.875	ZH60151C72-0.875-BX
4-3/4	7/8 Min	ZH60151C76-0.875	ZH60151C76-0.875-BX
5	Full	ZH60151C80	ZH60151C80-BX
5	7/8 Min	ZH60151C80-0.875	ZH60151C80-0.875-BX
5-1/4	7/8 Min	ZH60151C84-0.875	ZH60151C84-0.875-BX
5-1/2	Full	ZH60151C88	ZH60151C88-BX
5-1/2	7/8 Min	ZH60151C88-0.875	ZH60151C88-0.875-BX
6	7/8 Min	ZH60151C96-0.875	ZH60151C96-0.875-BX
6-1/2	1-1/8 Min	ZH60151C104-1.125	ZH60151C104-1.125-BX
7	1-1/8 Min	ZH60151C112-1.125	ZH60151C112-1.125-BX
7-1/2	1-1/8 Min	ZH60151C120-1.125	ZH60151C120-1.125-BX
8	1-1/8 Min	ZH60151C128-1.125	ZH60151C128-1.125-BX

5/16-24 Thread Size

Length	Full or Partial Threads	18-8 SS Part Number	18-8 SS, Bl Ox Part Number
2-1/2	Full	ZH60151F40	ZH60151F40-BX
2-1/2	7/8 Min	ZH60151F40-0.875	ZH60151F40-0.875-BX
2-3/4	7/8 Min	ZH60151F44-0.875	ZH60151F44-0.875-BX
3	Full	ZH60151F48	ZH60151F48-BX
3	7/8 Min	ZH60151F48-0.875	ZH60151F48-0.875-BX
3-1/4	7/8 Min	ZH60151F52-0.875	ZH60151F52-0.875-BX
3-1/2	Full	ZH60151F56	ZH60151F56-BX
3-1/2	7/8 Min	ZH60151F56-0.875	ZH60151F56-0.875-BX
3-3/4	7/8 Min	ZH60151F60-0.875	ZH60151F60-0.875-BX
4	Full	ZH60151F64	ZH60151F64-BX
4	7/8 Min	ZH60151F64-0.875	ZH60151F64-0.875-BX
4-1/2	7/8 Min	ZH60151F72-0.875	ZH60151F72-0.875-BX
5	7/8 Min	ZH60151F80-0.875	ZH60151F80-0.875-BX
5-1/2	7/8 Min	ZH60151F88-0.875	ZH60151F88-0.875-BX
6	7/8 Min	ZH60151F96-0.875	ZH60151F96-0.875-BX

5/16-24 Thread Size

Length	Full or Partial Threads	18-8 SS Part Number	18-8 SS, Bl Ox Part Number
1/2	Full	ZH60151F08	ZH60151F08-BX
5/8	Full	ZH60151F10	ZH60151F10-BX
3/4	Full	ZH60151F12	ZH60151F12-BX
7/8	Full	ZH60151F14	ZH60151F14-BX
1	Full	ZH60151F16	ZH60151F16-BX
1-1/8	Full	ZH60151F18	ZH60151F18-BX
1-1/4	Full	ZH60151F20	ZH60151F20-BX
1-1/4	7/8 Min	ZH60151F20-0.875	ZH60151F20-0.875-BX
1-3/8	7/8 Min	ZH60151F22-0.875	ZH60151F22-0.875-BX
1-1/2	Full	ZH60151F24	ZH60151F24-BX
1-1/2	7/8 Min	ZH60151F24-0.875	ZH60151F24-0.875-BX
1-3/4	Full	ZH60151F28	ZH60151F28-BX
1-3/4	7/8 Min	ZH60151F28-0.875	ZH60151F28-0.875-BX
2	Full	ZH60151F32	ZH60151F32-BX
2	7/8 Min	ZH60151F32-0.875	ZH60151F32-0.875-BX
2-1/4	7/8 Min	ZH60151F36-0.875	ZH60151F36-0.875-BX

3/8-16 Thread Size

Length	Full or Partial Threads	18-8 SS Part Number	18-8 SS, Bl Ox Part Number
3/8	Full	ZH60138C06	ZH60138C06-BX
1/2	Full	ZH60138C08	ZH60138C08-BX
5/8	Full	ZH60138C10	ZH60138C10-BX
3/4	Full	ZH60138C12	ZH60138C12-BX
7/8	Full	ZH60138C14	ZH60138C14-BX
1	Full	ZH60138C16	ZH60138C16-BX
1-1/8	Full	ZH60138C18	ZH60138C18-BX
1-1/4	Full	ZH60138C20	ZH60138C20-BX
1-3/8	Full	ZH60138C22	ZH60138C22-BX
1-1/2	Full	ZH60138C24	ZH60138C24-BX
1-1/2	1 Min	ZH60138C24-1	ZH60138C24-1-BX
1-5/8	Full	ZH60138C26	ZH60138C26-BX
1-5/8	1 Min	ZH60138C26-1	ZH60138C26-1-BX
1-3/4	Full	ZH60138C28	ZH60138C28-BX
1-3/4	1 Min	ZH60138C28-1	ZH60138C28-1-BX
1-7/8	Full	ZH60138C30	ZH60138C30-BX

Hex Head Cap Screws — Inch

18-8 SS | Plain | Black Oxide

3/8-16 Thread Size

Length	Full or Partial Threads	18-8 SS Part Number	18-8 SS, Bl Ox Part Number
2	Full	ZH60138C32	ZH60138C32-BX
2	1 Min	ZH60138C32-1	ZH60138C32-1-BX
2-1/4	Full	ZH60138C36	ZH60138C36-BX
2-1/4	1 Min	ZH60138C36-1	ZH60138C36-1-BX
2-1/2	Full	ZH60138C40	ZH60138C40-BX
2-1/2	1 Min	ZH60138C40-1	ZH60138C40-1-BX
2-3/4	Full	ZH60138C44	ZH60138C44-BX
2-3/4	1 Min	ZH60138C44-1	ZH60138C44-1-BX
3	Full	ZH60138C48	ZH60138C48-BX
3	1 Min	ZH60138C48-1	ZH60138C48-1-BX
3-1/4	Full	ZH60138C52	ZH60138C52-BX
3-1/4	1 Min	ZH60138C52-1	ZH60138C52-1-BX
3-1/2	Full	ZH60138C56	ZH60138C56-BX
3-1/2	1 Min	ZH60138C56-1	ZH60138C56-1-BX
3-3/4	Full	ZH60138C60	ZH60138C60-BX
3-3/4	1 Min	ZH60138C60-1	ZH60138C60-1-BX
4	Full	ZH60138C64	ZH60138C64-BX
4	1 Min	ZH60138C64-1	ZH60138C64-1-BX
4-1/4	Full	ZH60138C68	ZH60138C68-BX
4-1/4	1 Min	ZH60138C68-1	ZH60138C68-1-BX
4-1/2	Full	ZH60138C72	ZH60138C72-BX
4-1/2	1 Min	ZH60138C72-1	ZH60138C72-1-BX
4-3/4	Full	ZH60138C76	ZH60138C76-BX
4-3/4	1 Min	ZH60138C76-1	ZH60138C76-1-BX
5	Full	ZH60138C80	ZH60138C80-BX
5	1 Min	ZH60138C80-1	ZH60138C80-1-BX
5-1/4	1 Min	ZH60138C84-1	ZH60138C84-1-BX
5-1/2	Full	ZH60138C88	ZH60138C88-BX
5-1/2	1 Min	ZH60138C88-1	ZH60138C88-1-BX
5-3/4	1 Min	ZH60138C92-1	ZH60138C92-1-BX
6	1 Min	ZH60138C96-1	ZH60138C96-1-BX
6-1/2	1-1/4 Min	ZH60138C104-1.25	ZH60138C104-1.25-BX
7	1-1/4 Min	ZH60138C112-1.25	ZH60138C112-1.25-BX
7-1/2	1-1/4 Min	ZH60138C120-1.25	ZH60138C120-1.25-BX
8	1-1/4 Min	ZH60138C128-1.25	ZH60138C128-1.25-BX

3/8-16 Thread Size

Length	Full or Partial Threads	18-8 SS Part Number	18-8 SS, Bl Ox Part Number
8-1/2	1-1/4 Min	ZH60138C136-1.25	ZH60138C136-1.25-BX
9	1-1/4 Min	ZH60138C144-1.25	ZH60138C144-1.25-BX
9-1/2	1-1/4 Min	ZH60138C152-1.25	ZH60138C152-1.25-BX
10	1-1/4 Min	ZH60138C160-1.25	ZH60138C160-1.25-BX
10-1/2	1-1/4 Min	ZH60138C168-1.25	ZH60138C168-1.25-BX
11	1-1/4 Min	ZH60138C176-1.25	ZH60138C176-1.25-BX
12	1-1/4 Min	ZH60138C192-1.25	ZH60138C192-1.25-BX
13	1-1/4 Min	ZH60138C208-1.25	ZH60138C208-1.25-BX
14	1-1/4 Min	ZH60138C224-1.25	ZH60138C224-1.25-BX
16	1-1/4 Min	ZH60138C256-1.25	ZH60138C256-1.25-BX
18	1-1/4 Min	ZH60138C288-1.25	ZH60138C288-1.25-BX
20	1-1/4 Min	ZH60138C320-1.25	ZH60138C320-1.25-BX

Hex Head Cap Screws — Inch

18-8 SS | Plain | Black Oxide

3/8-24 Thread Size

Length	Full or Partial Threads	18-8 SS Part Number	18-8 SS, Bl Ox Part Number
1/2	Full	ZH60138F08	ZH60138F08-BX
5/8	Full	ZH60138F10	ZH60138F10-BX
3/4	Full	ZH60138F12	ZH60138F12-BX
7/8	Full	ZH60138F14	ZH60138F14-BX
1	Full	ZH60138F16	ZH60138F16-BX
1-1/8	Full	ZH60138F18	ZH60138F18-BX
1-1/4	Full	ZH60138F20	ZH60138F20-BX
1-1/2	Full	ZH60138F24	ZH60138F24-BX
1-1/2	1 Min	ZH60138F24-1	ZH60138F24-1-BX
1-3/4	Full	ZH60138F28	ZH60138F28-BX
1-3/4	1 Min	ZH60138F28-1	ZH60138F28-1-BX
2	Full	ZH60138F32	ZH60138F32-BX
2	1 Min	ZH60138F32-1	ZH60138F32-1-BX
2-1/4	Full	ZH60138F36	ZH60138F36-BX
2-1/4	1 Min	ZH60138F36-1	ZH60138F36-1-BX
2-1/2	Full	ZH60138F40	ZH60138F40-BX
2-1/2	1 Min	ZH60138F40-1	ZH60138F40-1-BX
2-3/4	Full	ZH60138F44	ZH60138F44-BX
2-3/4	1 Min	ZH60138F44-1	ZH60138F44-1-BX
3	Full	ZH60138F48	ZH60138F48-BX
3	1 Min	ZH60138F48-1	ZH60138F48-1-BX
3-1/4	1 Min	ZH60138F52-1	ZH60138F52-1-BX
3-1/2	Full	ZH60138F56	ZH60138F56-BX
3-1/2	1 Min	ZH60138F56-1	ZH60138F56-1-BX
3-3/4	1 Min	ZH60138F60-1	ZH60138F60-1-BX
4	Full	ZH60138F64	ZH60138F64-BX
4	1 Min	ZH60138F64-1	ZH60138F64-1-BX
4-1/4	1 Min	ZH60138F68-1	ZH60138F68-1-BX
4-1/2	1 Min	ZH60138F72-1	ZH60138F72-1-BX
5	1 Min	ZH60138F80-1	ZH60138F80-1-BX
5-1/2	1 Min	ZH60138F88-1	ZH60138F88-1-BX
6	1 Min	ZH60138F96-1	ZH60138F96-1-BX
6-1/2	1-1/4 Min	ZH60138F104-1.25	ZH60138F104-1.25-BX

7/16-14 Thread Size

Length	Full or Partial Threads	18-8 SS Part Number	18-8 SS, Bl Ox Part Number
3/4	Full	ZH60171C12	ZH60171C12-BX
7/8	Full	ZH60171C14	ZH60171C14-BX
1	Full	ZH60171C16	ZH60171C16-BX
1-1/8	Full	ZH60171C18	ZH60171C18-BX
1-1/4	Full	ZH60171C20	ZH60171C20-BX
1-3/8	Full	ZH60171C22	ZH60171C22-BX
1-1/2	Full	ZH60171C24	ZH60171C24-BX
1-3/4	Full	ZH60171C28	ZH60171C28-BX
2	Full	ZH60171C32	ZH60171C32-BX
2-1/4	Full	ZH60171C36	ZH60171C36-BX
2-1/2	Full	ZH60171C40	ZH60171C40-BX
2-3/4	Full	ZH60171C44	ZH60171C44-BX
3	Full	ZH60171C48	ZH60171C48-BX
3-1/4	Full	ZH60171C52	ZH60171C52-BX
3-1/2	1-1/8 Min	ZH60171C56-1.125	ZH60171C56-1.125-BX
3-3/4	1-1/8 Min	ZH60171C60-1.125	ZH60171C60-1.125-BX
4	1-1/8 Min	ZH60171C64-1.125	ZH60171C64-1.125-BX
4-1/2	1-1/8 Min	ZH60171C72-1.125	ZH60171C72-1.125-BX
5	1-1/8 Min	ZH60171C80-1.125	ZH60171C80-1.125-BX
5-1/2	1-1/8 Min	ZH60171C88-1.125	ZH60171C88-1.125-BX
6	1-1/8 Min	ZH60171C96-1.125	ZH60171C96-1.125-BX
6-1/2	1-3/8 Min	ZH60171C104-1.375	ZH60171C104-1.375-BX
7	1-3/8 Min	ZH60171C14-1.375	ZH60171C14-1.375-BX
8	1-3/8 Min	ZH60171C128-1.375	ZH60171C128-1.375-BX
10	1-3/8 Min	ZH60171C160-1.375	ZH60171C160-1.375-BX
12	1-3/8 Min	ZH60171C192-1.375	ZH60171C192-1.375-BX

Hex Head Cap Screws — Inch

18-8 SS | Plain | Black Oxide

7/16-20 Thread Size

Length	Full or Partial Threads	18-8 SS Part Number	18-8 SS, Bl Ox Part Number
3/4	Full	ZH60171F12	ZH60171F12-BX
7/8	Full	ZH60171F14	ZH60171F14-BX
1	Full	ZH60171F16	ZH60171F16-BX
1-1/8	Full	ZH60171F18	ZH60171F18-BX
1-1/4	Full	ZH60171F20	ZH60171F20-BX
1-3/8	Full	ZH60171F22	ZH60171F22-BX
1-1/2	Full	ZH60171F24	ZH60171F24-BX
1-3/4	Full	ZH60171F28	ZH60171F28-BX
1-3/4	1-1/4 Min	ZH60171F28-1.125	ZH60171F28-1.125-BX
2	Full	ZH60171F32	ZH60171F32-BX
2	1-1/4 Min	ZH60171F32-1.125	ZH60171F32-1.125-BX
2-1/4	1-1/4 Min	ZH60171F36-1.125	ZH60171F36-1.125-BX
2-1/2	Full	ZH60171F40	ZH60171F40-BX
2-1/2	1-1/4 Min	ZH60171F40-1.125	ZH60171F40-1.125-BX
2-3/4	1-1/4 Min	ZH60171F44-1.125	ZH60171F44-1.125-BX
3	Full	ZH60171F48	ZH60171F48-BX
3	1-1/4 Min	ZH60171F48-1.125	ZH60171F48-1.125-BX
3-1/4	1-1/4 Min	ZH60171F52-1.125	ZH60171F52-1.125-BX
3-1/2	Full	ZH60171F56	ZH60171F56-BX
3-1/2	1-1/4 Min	ZH60171F56-1.125	ZH60171F56-1.125-BX
3-3/4	1-1/4 Min	ZH60171F60-1.125	ZH60171F60-1.125-BX
4	Full	ZH60171F64	ZH60171F64-BX
4	1-1/4 Min	ZH60171F64-1.125	ZH60171F64-1.125-BX
4-1/2	1-1/4 Min	ZH60171F72-1.125	ZH60171F72-1.125-BX
5	1-1/4 Min	ZH60171F80-1.125	ZH60171F80-1.125-BX
5-1/2	1-1/4 Min	ZH60171F88-1.125	ZH60171F88-1.125-BX
6	1-1/4 Min	ZH60171F96-1.125	ZH60171F96-1.125-BX

1/2-13 Thread Size

Length	Full or Partial Threads	18-8 SS Part Number	18-8 SS, Bl Ox Part Number
1/2	Full	ZH60112C08	ZH60112C08-BX
5/8	Full	ZH60112C10	ZH60112C10-BX
3/4	Full	ZH60112C12	ZH60112C12-BX
7/8	Full	ZH60112C14	ZH60112C14-BX
1	Full	ZH60112C16	ZH60112C16-BX
1-1/8	Full	ZH60112C18	ZH60112C18-BX
1-1/4	Full	ZH60112C20	ZH60112C20-BX
1-3/8	Full	ZH60112C22	ZH60112C22-BX
1-3/8	1-1/4 Min	ZH60112C22-1.25	ZH60112C22-1.25-BX
1-1/2	Full	ZH60112C24	ZH60112C24-BX
1-1/2	1-1/4 Min	ZH60112C24-1.25	ZH60112C24-1.25-BX
1-5/8	1-1/4 Min	ZH60112C26-1.25	ZH60112C26-1.25-BX
1-3/4	Full	ZH60112C28	ZH60112C28-BX
1-3/4	1-1/4 Min	ZH60112C28-1.25	ZH60112C28-1.25-BX
1-7/8	1-1/4 Min	ZH60112C30-1.25	ZH60112C30-1.25-BX
2	Full	ZH60112C32	ZH60112C32-BX
2	1-1/4 Min	ZH60112C32-1.25	ZH60112C32-1.25-BX
2-1/4	Full	ZH60112C36	ZH60112C36-BX
2-1/4	1-1/4 Min	ZH60112C36-1.25	ZH60112C36-1.25-BX
2-1/2	Full	ZH60112C40	ZH60112C40-BX
2-1/2	1-1/4 Min	ZH60112C40-1.25	ZH60112C40-1.25-BX
2-3/4	Full	ZH60112C44	ZH60112C44-BX
2-3/4	1-1/4 Min	ZH60112C44-1.25	ZH60112C44-1.25-BX
3	Full	ZH60112C48	ZH60112C48-BX
3	1-1/4 Min	ZH60112C48-1.25	ZH60112C48-1.25-BX
3-1/4	Full	ZH60112C52	ZH60112C52-BX
3-1/4	1-1/4 Min	ZH60112C52-1.25	ZH60112C52-1.25-BX
3-1/2	Full	ZH60112C56	ZH60112C56-BX
3-1/2	1-1/4 Min	ZH60112C56-1.25	ZH60112C56-1.25-BX
3-3/4	Full	ZH60112C60	ZH60112C60-BX
3-3/4	1-1/4 Min	ZH60112C60-1.25	ZH60112C60-1.25-BX
4	Full	ZH60112C64	ZH60112C64-BX

Hex Head Cap Screws — Inch

18-8 SS | Plain | Black Oxide

1/2-13 Thread Size

Length	Full or Partial Threads	18-8 SS Part Number	18-8 SS, Bl Ox Part Number
4	1-1/4 Min	ZH60112C64-1.25	ZH60112C64-1.25-BX
4-1/4	1-1/4 Min	ZH60112C68-1.25	ZH60112C68-1.25-BX
4-1/2	Full	ZH60112C72	ZH60112C72-BX
4-1/2	1-1/4 Min	ZH60112C72-1.25	ZH60112C72-1.25-BX
4-3/4	Full	ZH60112C76	ZH60112C76-BX
4-3/4	1-1/4 Min	ZH60112C76-1.25	ZH60112C76-1.25-BX
5	Full	ZH60112C80	ZH60112C80-BX
5	1-1/4 Min	ZH60112C80-1.25	ZH60112C80-1.25-BX
5-1/4	1-1/4 Min	ZH60112C84-1.25	ZH60112C84-1.25-BX
5-1/2	Full	ZH60112C88	ZH60112C88-BX
5-1/2	1-1/4 Min	ZH60112C88-1.25	ZH60112C88-1.25-BX
5-3/4	1-1/4 Min	ZH60112C92-1.25	ZH60112C92-1.25-BX
6	1-1/4 Min	ZH60112C96-1.25	ZH60112C96-1.25-BX
6-1/2	1-1/2 Min	ZH60112C104-1.5	ZH60112C104-1.5-BX
7	1-1/2 Min	ZH60112C112-1.5	ZH60112C112-1.5-BX
7-1/2	1 Min	ZH60114C120-0.5	ZH60114C120-0.5-BX
7-1/2	1-1/2 Min	ZH60112C120-1.5	ZH60112C120-1.5-BX
8	1-1/2 Min	ZH60112C128-1.5	ZH60112C128-1.5-BX
8-1/2	1-1/2 Min	ZH60112C136-1.5	ZH60112C136-1.5-BX
9	1-1/2 Min	ZH60112C144-1.5	ZH60112C144-1.5-BX
9-1/2	1-1/2 Min	ZH60112C152-1.5	ZH60112C152-1.5-BX
10	1-1/2 Min	ZH60112C160-1.5	ZH60112C160-1.5-BX
10-1/2	1-1/2 Min	ZH60112C168-1.5	ZH60112C168-1.5-BX
11	1-1/2 Min	ZH60112C176-1.5	ZH60112C176-1.5-BX
11-1/2	1-1/2 Min	ZH60112C184-1.5	ZH60112C184-1.5-BX
12	1-1/2 Min	ZH60112C192-1.5	ZH60112C192-1.5-BX
12-1/2	1-1/2 Min	ZH60112C200-1.5	ZH60112C200-1.5-BX
13	1-1/2 Min	ZH60112C208-1.5	ZH60112C208-1.5-BX
13-1/2	1-1/2 Min	ZH60112C216-1.5	ZH60112C216-1.5-BX
14	1-1/2 Min	ZH60112C224-1.5	ZH60112C224-1.5-BX
14-1/2	1-1/2 Min	ZH60112C232-1.5	ZH60112C232-1.5-BX
15	1-1/2 Min	ZH60112C240-1.5	ZH60112C240-1.5-BX
16	1-1/2 Min	ZH60112C256-1.5	ZH60112C256-1.5-BX
18	1-1/2 Min	ZH60112C288-1.5	ZH60112C288-1.5-BX
20	1-1/2 Min	ZH60112C320-1.5	ZH60112C320-1.5-BX

1/2-20 Thread Size

Length	Full or Partial Threads	18-8 SS Part Number	18-8 SS, Bl Ox Part Number
1/2	Full	ZH60112F08	ZH60112F08-BX
5/8	Full	ZH60112F10	ZH60112F10-BX
3/4	Full	ZH60112F12	ZH60112F12-BX
1	Full	ZH60112F16	ZH60112F16-BX
1-1/4	Full	ZH60112F20	ZH60112F20-BX
1-1/2	Full	ZH60112F24	ZH60112F24-BX
1-3/4	Full	ZH60112F28	ZH60112F28-BX
2	Full	ZH60112F32	ZH60112F32-BX
2	1-1/4 Min	ZH60112F32-1.25	ZH60112F32-1.25-BX
2-1/4	Full	ZH60112F36	ZH60112F36-BX
2-1/4	1-1/4 Min	ZH60112F36-1.25	ZH60112F36-1.25-BX
2-1/2	Full	ZH60112F40	ZH60112F40-BX
2-1/2	1-1/4 Min	ZH60112F40-1.25	ZH60112F40-1.25-BX
2-3/4	Full	ZH60112F44	ZH60112F44-BX
2-3/4	1-1/4 Min	ZH60112F44-1.25	ZH60112F44-1.25-BX
3	Full	ZH60112F48	ZH60112F48-BX
3	1-1/4 Min	ZH60112F48-1.25	ZH60112F48-1.25-BX
3-1/2	Full	ZH60112F56	ZH60112F56-BX
3-1/2	1-1/4 Min	ZH60112F56-1.25	ZH60112F56-1.25-BX
3-3/4	1-1/4 Min	ZH60112F60-1.25	ZH60112F60-1.25-BX
4	Full	ZH60112F64	ZH60112F64-BX
4	1-1/4 Min	ZH60112F64-1.25	ZH60112F64-1.25-BX
4-1/4	1-1/4 Min	ZH60112F68-1.25	ZH60112F68-1.25-BX
4-1/2	Full	ZH60112F72	ZH60112F72-BX
4-1/2	1-1/4 Min	ZH60112F72-1.25	ZH60112F72-1.25-BX
4-3/4	1-1/4 Min	ZH60112F76-1.25	ZH60112F76-1.25-BX
5	Full	ZH60112F80	ZH60112F80-BX
5	1-1/4 Min	ZH60112F80-1.25	ZH60112F80-1.25-BX
5-1/2	1-1/4 Min	ZH60112F88-1.25	ZH60112F88-1.25-BX
6	1-1/4 Min	ZH60112F96-1.25	ZH60112F96-1.25-BX
6-1/2	1-1/2 Min	ZH60112F104-1.5	ZH60112F104-1.5-BX
7	1-1/2 Min	ZH60112F112-1.5	ZH60112F112-1.5-BX
7-1/2	1-1/2 Min	ZH60112F120-1.5	ZH60112F120-1.5-BX
8	1-1/2 Min	ZH60112F128-1.5	ZH60112F128-1.5-BX
10	1-1/2 Min	ZH60112F160-1.5	ZH60112F160-1.5-BX

Hex Head Cap Screws — Inch

18-8 SS | Plain | Black Oxide

9/16-12 Thread Size

Length	Full or Partial Threads	18-8 SS Part Number	18-8 SS, Bl Ox Part Number
3/4	Full	ZH60191C12	ZH60191C12-BX
1	Full	ZH60191C16	ZH60191C16-BX
1-1/4	Full	ZH60191C20	ZH60191C20-BX
1-1/2	Full	ZH60191C24	ZH60191C24-BX
1-3/4	Full	ZH60191C28	ZH60191C28-BX
2	Full	ZH60191C32	ZH60191C32-BX
2-1/4	1-3/8 Min	ZH60191C36-1.375	ZH60191C36-1.375-BX
2-1/2	1-3/8 Min	ZH60191C40-1.375	ZH60191C40-1.375-BX
2-3/4	1-3/8 Min	ZH60191C44-1.375	ZH60191C44-1.375-BX
3	1-3/8 Min	ZH60191C48-1.375	ZH60191C48-1.375-BX
3-1/2	1-3/8 Min	ZH60191C56-1.375	ZH60191C56-1.375-BX
4	1-3/8 Min	ZH60191C64-1.375	ZH60191C64-1.375-BX
5	1-3/8 Min	ZH60191C80-1.375	ZH60191C80-1.375-BX
5-1/2	1-3/8 Min	ZH60191C88-1.375	ZH60191C88-1.375-BX
6	1-3/8 Min	ZH60191C96-1.375	ZH60191C96-1.375-BX

9/16-18 Thread Size

Length	Full or Partial Threads	18-8 SS Part Number	18-8 SS, Bl Ox Part Number
1	Full	ZH60191F16	ZH60191F16-BX
1-1/4	Full	ZH60191F20	ZH60191F20-BX
1-1/2	Full	ZH60191F24	ZH60191F24-BX
1-3/4	Full	ZH60191F28	ZH60191F28-BX
2	Full	ZH60191F32	ZH60191F32-BX
2-1/4	1-3/8 Min	ZH60191F36-1.375	ZH60191F36-1.375-BX
2-1/2	1-3/8 Min	ZH60191F40-1.375	ZH60191F40-1.375-BX
2-3/4	1-3/8 Min	ZH60191F44-1.375	ZH60191F44-1.375-BX
3	1-3/8 Min	ZH60191F48-1.375	ZH60191F48-1.375-BX
3-1/2	1-3/8 Min	ZH60191F56-1.375	ZH60191F56-1.375-BX
4	1-3/8 Min	ZH60191F64-1.375	ZH60191F64-1.375-BX
4-1/2	1-3/8 Min	ZH60191F72-1.375	ZH60191F72-1.375-BX
5	1-3/8 Min	ZH60191F80-1.375	ZH60191F80-1.375-BX
5-1/2	1-3/8 Min	ZH60191F88-1.375	ZH60191F88-1.375-BX

5/8-11 Thread Size

Length	Full or Partial Threads	18-8 SS Part Number	18-8 SS, Bl Ox Part Number
3/4	Full	ZH60158C12	ZH60158C12-BX
7/8	Full	ZH60158C14	ZH60158C14-BX
1	Full	ZH60158C16	ZH60158C16-BX
1-1/4	Full	ZH60158C20	ZH60158C20-BX
1-1/2	Full	ZH60158C24	ZH60158C24-BX
1-3/4	Full	ZH60158C28	ZH60158C28-BX
2	Full	ZH60158C32	ZH60158C32-BX
2-1/4	Full	ZH60158C36	ZH60158C36-BX
2-1/4	1-1/2 Min	ZH60158C36-1.5	ZH60158C36-1.5-BX
2-1/2	Full	ZH60158C40	ZH60158C40-BX
2-1/2	1-1/2 Min	ZH60158C40-1.5	ZH60158C40-1.5-BX
2-3/4	Full	ZH60158C44	ZH60158C44-BX
2-3/4	1-1/2 Min	ZH60158C44-1.5	ZH60158C44-1.5-BX
3	Full	ZH60158C48	ZH60158C48-BX
3	1-1/2 Min	ZH60158C48-1.5	ZH60158C48-1.5-BX
3-1/4	Full	ZH60158C52	ZH60158C52-BX
3-1/4	1-1/2 Min	ZH60158C52-1.5	ZH60158C52-1.5-BX
3-1/2	Full	ZH60158C56	ZH60158C56-BX
3-1/2	1-1/2 Min	ZH60158C56-1.5	ZH60158C56-1.5-BX
3-3/4	Full	ZH60158C60	ZH60158C60-BX
3-3/4	1-1/2 Min	ZH60158C60-1.5	ZH60158C60-1.5-BX
4	Full	ZH60158C64	ZH60158C64-BX
4	1-1/2 Min	ZH60158C64-1.5	ZH60158C64-1.5-BX
4-1/4	1-1/2 Min	ZH60158C68-1.5	ZH60158C68-1.5-BX
4-1/2	Full	ZH60158C72	ZH60158C72-BX
4-1/2	1-1/2 Min	ZH60158C72-1.5	ZH60158C72-1.5-BX
4-3/4	1-1/2 Min	ZH60158C76-1.5	ZH60158C76-1.5-BX
5	Full	ZH60158C80	ZH60158C80-BX
5	Full	ZH60158C80-1.5	ZH60158C80-1.5-BX
5-1/4	1-1/2 Min	ZH60158C84-1.5	ZH60158C84-1.5-BX
5-1/2	Full	ZH60158C88	ZH60158C88-BX
5-1/2	1-1/2 Min	ZH60158C88-1.5	ZH60158C88-1.5-BX

Hex Head Cap Screws — Inch

18-8 SS | Plain | Black Oxide

5/8-11 Thread Size

Length	Full or Partial Threads	18-8 SS Part Number	18-8 SS, Bl Ox Part Number
6	1-1/2 Min	ZH60158C96-1.5	ZH60158C96-1.5-BX
6-1/2	1-3/4 Min	ZH60158C104-1.75	ZH60158C104-1.75-BX
7	1-3/4 Min	ZH60158C112-1.75	ZH60158C112-1.75-BX
7-1/2	1-3/4 Min	ZH60158C120-1.75	ZH60158C120-1.75-BX
8	1-3/4 Min	ZH60158C128-1.75	ZH60158C128-1.75-BX
9	1-3/4 Min	ZH60158C144-1.75	ZH60158C144-1.75-BX
9-1/2	1-3/4 Min	ZH60158C152-1.75	ZH60158C152-1.75-BX
10	1-3/4 Min	ZH60158C160-1.75	ZH60158C160-1.75-BX
10-1/2	1-3/4 Min	ZH60158C168-1.75	ZH60158C168-1.75-BX
11	1-3/4 Min	ZH60158C176-1.75	ZH60158C176-1.75-BX
11-1/2	1-3/4 Min	ZH60158C184-1.75	ZH60158C184-1.75-BX
12	1-3/4 Min	ZH60158C192-1.75	ZH60158C192-1.75-BX
12-1/2	1-3/4 Min	ZH60158C200-1.75	ZH60158C200-1.75-BX
13	1-3/4 Min	ZH60158C208-1.75	ZH60158C208-1.75-BX
14	1-3/4 Min	ZH60158C224-1.75	ZH60158C224-1.75-BX
15	1-3/4 Min	ZH60158C240-1.75	ZH60158C240-1.75-BX
16	1-3/4 Min	ZH60158C256-1.75	ZH60158C256-1.75-BX
18	1-3/4 Min	ZH60158C288-1.75	ZH60158C288-1.75-BX
20	1-3/4 Min	ZH60158C320-1.75	ZH60158C320-1.75-BX

5/8-18 Thread Size

Length	Full or Partial Threads	18-8 SS Part Number	18-8 SS, Bl Ox Part Number
3/4	Full	ZH60158F12	ZH60158F12-BX
1	Full	ZH60158F16	ZH60158F16-BX
1-1/4	Full	ZH60158F20	ZH60158F20-BX
1-1/2	Full	ZH60158F24	ZH60158F24-BX
1-3/4	Full	ZH60158F28	ZH60158F28-BX
2	Full	ZH60158F32	ZH60158F32-BX
2-1/4	Full	ZH60158F36	ZH60158F36-BX
2-1/2	Full	ZH60158F40	ZH60158F40-BX
2-1/2	1-1/2 Min	ZH60158F40-1.5	ZH60158F40-1.5-BX
2-3/4	1-1/2 Min	ZH60158F44-1.5	ZH60158F44-1.5-BX
3	Full	ZH60158F48	ZH60158F48-BX
3	1-1/2 Min	ZH60158F48-1.5	ZH60158F48-1.5-BX
3-1/4	1-1/2 Min	ZH60158F52-1.5	ZH60158F52-1.5-BX
3-1/2	Full	ZH60158F56	ZH60158F56-BX
3-1/2	1-1/2 Min	ZH60158F56-1.5	ZH60158F56-1.5-BX
3-3/4	1-1/2 Min	ZH60158F60-1.5	ZH60158F60-1.5-BX
4	Full	ZH60158F64	ZH60158F64-BX
4	1-1/2 Min	ZH60158F64-1.5	ZH60158F64-1.5-BX
4-1/2	Full	ZH60158F72	ZH60158F72-BX
4-1/2	1-1/2 Min	ZH60158F72-1.5	ZH60158F72-1.5-BX
5	Full	ZH60158F80	ZH60158F80-BX
5	1-1/2 Min	ZH60158F80-1.5	ZH60158F80-1.5-BX
5-1/2	1-1/2 Min	ZH60158F88-1.5	ZH60158F88-1.5-BX
6	1-1/2 Min	ZH60158F96-1.5	ZH60158F96-1.5-BX
6-1/2	1-3/4 Min	ZH60158F104-1.75	ZH60158F104-1.75-BX
7	1-3/4 Min	ZH60158F112-1.75	ZH60158F112-1.75-BX
7-1/2	1-3/4 Min	ZH60158F120-1.75	ZH60158F120-1.75-BX
8	1-3/4 Min	ZH60158F128-1.75	ZH60158F128-1.75-BX
10	1-3/4 Min	ZH60158F160-1.75	ZH60158F160-1.75-BX

Hex Head Cap Screws — Inch

18-8 SS | Plain | Black Oxide

3/4-10 Thread Size

Length	Full or Partial Threads	18-8 SS Part Number	18-8 SS, Bl Ox Part Number
1	Full	ZH60134C16	ZH60134C16-BX
1-1/4	Full	ZH60134C20	ZH60134C20-BX
1-1/2	Full	ZH60134C24	ZH60134C24-BX
1-3/4	Full	ZH60134C28	ZH60134C28-BX
2	Full	ZH60134C32	ZH60134C32-BX
2	1-3/4 Min	ZH60134C32-1.75	ZH60134C32-1.75-BX
2-1/4	Full	ZH60134C36	ZH60134C36-BX
2-1/2	Full	ZH60134C40	ZH60134C40-BX
2-3/4	Full	ZH60134C44	ZH60134C44-BX
2-3/4	1-3/4 Min	ZH60134C44-1.75	ZH60134C44-1.75-BX
3	Full	ZH60134C48	ZH60134C48-BX
3	1-3/4 Min	ZH60134C48-1.75	ZH60134C48-1.75-BX
3/4-10	Full	ZH60134C52	ZH60134C52-BX
3/4-10	1-3/4 Min	ZH60134C52-1.75	ZH60134C52-1.75-BX
3-1/2	Full	ZH60134C56	ZH60134C56-BX
3-1/2	1-3/4 Min	ZH60134C56-1.75	ZH60134C56-1.75-BX
3-3/4	1-3/4 Min	ZH60134C60-1.75	ZH60134C60-1.75-BX
4	Full	ZH60134C64	ZH60134C64-BX
4	1-3/4 Min	ZH60134C64-1.75	ZH60134C64-1.75-BX
4-1/4	1-3/4 Min	ZH60134C68-1.75	ZH60134C68-1.75-BX
4-1/2	Full	ZH60134C72	ZH60134C72-BX
4-1/2	1-3/4 Min	ZH60134C72-1.75	ZH60134C72-1.75-BX
5	Full	ZH60134C80	ZH60134C80-BX
5	1-3/4 Min	ZH60134C80-1.75	ZH60134C80-1.75-BX
5-1/2	Full	ZH60134C88	ZH60134C88-BX
5-1/2	1-3/4 Min	ZH60134C88-1.75	ZH60134C88-1.75-BX
6	1-3/4 Min	ZH60134C96-1.75	ZH60134C96-1.75-BX
6-1/2	2 Min	ZH60134C104-2	ZH60134C104-2-BX
7	2 Min	ZH60134C112-2	ZH60134C112-2-BX
7-1/2	2 Min	ZH60134C120-2	ZH60134C120-2-BX
8	2 Min	ZH60134C128-2	ZH60134C128-2-BX
9	2 Min	ZH60134C144-2	ZH60134C144-2-BX

3/4-10 Thread Size

Length	Full or Partial Threads	18-8 SS Part Number	18-8 SS, Bl Ox Part Number
10	2 Min	ZH60134C160-2	ZH60134C160-2-BX
10-1/2	2 Min	ZH60134C168-2	ZH60134C168-2-BX
11	2 Min	ZH60134C176-2	ZH60134C176-2-BX
11-1/2	2 Min	ZH60134C184-2	ZH60134C184-2-BX
12	2 Min	ZH60134C192-2	ZH60134C192-2-BX
12-1/2	2 Min	ZH60134C200-2	ZH60134C200-2-BX
13	2 Min	ZH60134C208-2	ZH60134C208-2-BX
13-1/2	2 Min	ZH60134C216-2	ZH60134C216-2-BX
14	2 Min	ZH60134C224-2	ZH60134C224-2-BX
15	2 Min	ZH60134C240-2	ZH60134C240-2-BX
16	2 Min	ZH60134C256-2	ZH60134C256-2-BX
18	2 Min	ZH60134C288-2	ZH60134C288-2-BX
20	2 Min	ZH60134C320-2	ZH60134C320-2-BX

3/4-16 Thread Size

Length	Full or Partial Threads	18-8 SS Part Number	18-8 SS, Bl Ox Part Number
1-1/4	Full	ZH60134F20	ZH60134F20-BX
1-1/2	Full	ZH60134F24	ZH60134F24-BX
1-3/4	Full	ZH60134F28	ZH60134F28-BX
2	Full	ZH60134F32	ZH60134F32-BX
2-1/4	Full	ZH60134F36	ZH60134F36-BX
2-1/2	Full	ZH60134F40	ZH60134F40-BX
2-3/4	1-3/4 Min	ZH60134F44-1.75	ZH60134F44-1.75-BX
3	Full	ZH60134F48	ZH60134F48-BX
3	1-3/4 Min	ZH60134F48-1.75	ZH60134F48-1.75-BX
3-1/4	Full	ZH60134F52	ZH60134F52-BX
3-1/2	1-3/4 Min	ZH60134F56-1.75	ZH60134F56-1.75-BX
4	Full	ZH60134F64	ZH60134F64-BX
4	1-3/4 Min	ZH60134F64-1.75	ZH60134F64-1.75-BX
4-1/2	1-3/4 Min	ZH60134F72-1.75	ZH60134F72-1.75-BX
5	1-3/4 Min	ZH60134F80-1.75	ZH60134F80-1.75-BX
5-1/2	1-3/4 Min	ZH60134F88-1.75	ZH60134F88-1.75-BX
6	1-3/4 Min	ZH60134F96-1.75	ZH60134F96-1.75-BX
6-1/2	2 Min	ZH60134F104-2	ZH60134F104-2-BX
7	2 Min	ZH60134F112-2	ZH60134F112-2-BX
8	2 Min	ZH60134F128-2	ZH60134F128-2-BX

Hex Head Cap Screws — Inch

18-8 SS | Plain | Black Oxide

7/8-9 Thread Size

Length	Full or Partial Threads	18-8 SS Part Number	18-8 SS, Bl Ox Part Number
1	Full	ZH60178C16	ZH60178C16-BX
1-1/4	Full	ZH60178C20	ZH60178C20-BX
1-1/2	Full	ZH60178C24	ZH60178C24-BX
1-3/4	Full	ZH60178C28	ZH60178C28-BX
2	Full	ZH60178C32	ZH60178C32-BX
2-1/4	Full	ZH60178C36	ZH60178C36-BX
2-1/2	Full	ZH60178C40	ZH60178C40-BX
2-3/4	Full	ZH60178C44	ZH60178C44-BX
3	Full	ZH60178C48	ZH60178C48-BX
3	2 Min	ZH60178C48-2	ZH60178C48-2-BX
3-1/4	2 Min	ZH60178C52-2	ZH60178C52-2-BX
3-1/2	Full	ZH60178C56	ZH60178C56-BX
3-1/2	2 Min	ZH60178C56-2	ZH60178C56-2-BX
3-3/4	2 Min	ZH60178C60-2	ZH60178C60-2-BX
4	Full	ZH60178C64	ZH60178C64-BX
4	2 Min	ZH60178C64-2	ZH60178C64-2-BX
4-1/4	2 Min	ZH60178C68-2	ZH60178C68-2-BX
4-1/2	Full	ZH60178C72	ZH60178C72-BX
4-1/2	2 Min	ZH60178C72-2	ZH60178C72-2-BX
4-3/4	2 Min	ZH60178C76-2	ZH60178C76-2-BX
5	Full	ZH60178C80	ZH60178C80-BX
5	2 Min	ZH60178C80-2	ZH60178C80-2-BX
5-1/2	2 Min	ZH60178C88-2	ZH60178C88-2-BX
6	2 Min	ZH60178C96-2	ZH60178C96-2-BX
6-1/2	2-1/4 Min	ZH60178C104-2.25	ZH60178C104-2.25-BX
7	2-1/4 Min	ZH60178C112-2.25	ZH60178C112-2.25-BX
8	2-1/4 Min	ZH60178C128-2.25	ZH60178C128-2.25-BX
8-1/2	2-1/4 Min	ZH60178C136-2.25	ZH60178C136-2.25-BX
9	2-1/4 Min	ZH60178C144-2.25	ZH60178C144-2.25-BX
9-1/2	2-1/4 Min	ZH60178C152-2.25	ZH60178C152-2.25-BX
10	2-1/4 Min	ZH60178C160-2.25	ZH60178C160-2.25-BX
11	2-1/4 Min	ZH60178C176-2.25	ZH60178C176-2.25-BX
12	2-1/4 Min	ZH60178C192-2.25	ZH60178C192-2.25-BX
12-1/2	2-1/4 Min	ZH60178C200-2.25	ZH60178C200-2.25-BX

7/8-14 Thread Size

Length	Full or Partial Threads	18-8 SS Part Number	18-8 SS, Bl Ox Part Number
1-1/2	Full	ZH60178F24	ZH60178F24-BX
1-3/4	Full	ZH60178F28	ZH60178F28-BX
2	Full	ZH60178F32	ZH60178F32-BX
2-1/2	Full	ZH60178F40	ZH60178F40-BX
3	2 Min	ZH60178F48-2	ZH60178F48-2-BX
3-1/2	2 Min	ZH60178F56-2	ZH60178F56-2-BX
4	2 Min	ZH60178F64-2	ZH60178F64-2-BX
4-1/2	2 Min	ZH60178F72-2	ZH60178F72-2-BX
5-1/2	2 Min	ZH60178F88-2	ZH60178F88-2-BX
6	2 Min	ZH60178F96-2	ZH60178F96-2-BX

1-8 Thread Size

Length	Full or Partial Threads	18-8 SS Part Number	18-8 SS, Bl Ox Part Number
1-1/2	Full	ZH60101C24	ZH60101C24-BX
1-3/4	Full	ZH60101C28	ZH60101C28-BX
2	Full	ZH60101C32	ZH60101C32-BX
2-1/4	Full	ZH60101C36	ZH60101C36-BX
2-1/2	Full	ZH60101C40	ZH60101C40-BX
2-3/4	Full	ZH60101C44	ZH60101C44-BX
3	Full	ZH60101C48	ZH60101C48-BX
3-1/4	2-1/4 Min	ZH60101C52-2.25	ZH60101C52-2.25-BX
3-1/2	Full	ZH60101C56	ZH60101C56-BX
3-1/2	2-1/4 Min	ZH60101C56-2.25	ZH60101C56-2.25-BX
3-3/4	2-1/4 Min	ZH60101C60-2.25	ZH60101C60-2.25-BX
4	Full	ZH60101C64	ZH60101C64-BX
4	2-1/4 Min	ZH60101C64-2.25	ZH60101C64-2.25-BX
4-1/4	2-1/4 Min	ZH60101C68-2.25	ZH60101C68-2.25-BX
4-1/2	Full	ZH60101C72	ZH60101C72-BX
4-1/2	2-1/4 Min	ZH60101C72-2.25	ZH60101C72-2.25-BX
4-3/4	2-1/4 Min	ZH60101C76-2.25	ZH60101C76-2.25-BX
5	Full	ZH60101C80	ZH60101C80-BX
5	2-1/4 Min	ZH60101C80-2.25	ZH60101C80-2.25-BX
5-1/2	Full	ZH60101C88	ZH60101C88-BX

Hex Head Cap Screws — Inch

18-8 SS | Plain | Black Oxide

1-8 Thread Size

Length	Full or Partial Threads	18-8 SS Part Number	18-8 SS, Bl Ox Part Number
5-1/2	2-1/4 Min	ZH60101C88-2.25	ZH60101C88-2.25-BX
6	2-1/4 Min	ZH60101C96-2.25	ZH60101C96-2.25-BX
6-1/2	2-1/2 Min	ZH60101C104-2.5	ZH60101C104-2.5-BX
7	2-1/2 Min	ZH60101C112-2.5	ZH60101C112-2.5-BX
7-1/2	2-1/2 Min	ZH60101C120-2.5	ZH60101C120-2.5-BX
8	2-1/2 Min	ZH60101C128-2.5	ZH60101C128-2.5-BX
8-1/2	2-1/2 Min	ZH60101C136-2.5	ZH60101C136-2.5-BX
9	2-1/2 Min	ZH60101C144-2.5	ZH60101C144-2.5-BX
9-1/2	2-1/2 Min	ZH60101C152-2.5	ZH60101C152-2.5-BX
10	2-1/2 Min	ZH60101C160-2.5	ZH60101C160-2.5-BX
10-1/2	2-1/2 Min	ZH60101C168-2.5	ZH60101C168-2.5-BX
11	2-1/2 Min	ZH60101C176-2.5	ZH60101C176-2.5-BX
12	2-1/2 Min	ZH60101C192-2.5	ZH60101C192-2.5-BX
15	2-1/2 Min	ZH60101C240-2.5	ZH60101C240-2.5-BX
18	2-1/2 Min	ZH60101C288-2.5	ZH60101C288-2.5-BX
20	2-1/2 Min	ZH60101C320-2.5	ZH60101C320-2.5-BX

1 1/8-7 Thread Size

Length	Full or Partial Threads	18-8 SS Part Number	18-8 SS, Bl Ox Part Number
1/8-7 x 2	Full	ZH6010011C32	ZH6010011C32-BX
1/8-7 x 2-1/2	Full	ZH6010011C40	ZH6010011C40-BX
1/8-7 x 2-3/4	Full	ZH6010011C44	ZH6010011C44-BX
1/8-7 x 3	Full	ZH6010011C48	ZH6010011C48-BX
1/8-7 x 3-1/2	Full	ZH6010011C56	ZH6010011C56-BX
1/8-7 x 4	2-1/2 Min	ZH6010011C64-2.5	ZH6010011C64-2.5-BX
1/8-7 x 4-1/2	2-1/2 Min	ZH6010011C72-2.5	ZH6010011C72-2.5-BX
1/8-7 x 5	2-1/2 Min	ZH6010011C80-2.5	ZH6010011C80-2.5-BX
1/8-7 x 5-1/2	2-1/2 Min	ZH6010011C88-2.5	ZH6010011C88-2.5-BX
1/8-7 x 6	2-1/2 Min	ZH6010011C96-2.5	ZH6010011C96-2.5-BX
1/8-7 x 7	2-3/4 Min	ZH6010011C112-2.75	ZH6010011C112-2.75-BX
1/8-7 x 7-1/2	2-3/4 Min	ZH6010011C120-2.75	ZH6010011C120-2.75-BX
1/8-7 x 8	2-3/4 Min	ZH6010011C128-2.75	ZH6010011C128-2.75-BX
1/8-7 x 9	2-3/4 Min	ZH6010011C144-2.75	ZH6010011C144-2.75-BX
1/8-7 x 12	2-3/4 Min	ZH6010011C192-2.75	ZH6010011C192-2.75-BX
1/8-7 x 14	2-3/4 Min	ZH6010011C224-2.75	ZH6010011C224-2.75-BX
1/8-7 x 16	2-3/4 Min	ZH6010011C256-2.75	ZH6010011C256-2.75-BX

1-14 Thread Size

Length	Full or Partial Threads	18-8 SS Part Number	18-8 SS, Bl Ox Part Number
1-1/2	Full	ZH60101F24	ZH60101F24-BX
2	Full	ZH60101F32	ZH60101F32-BX
2-1/4	Full	ZH60101F36	ZH60101F36-BX
2-1/2	Full	ZH60101F40	ZH60101F40-BX
2-3/4	2-1/4 Min	ZH60101F44-2.25	ZH60101F44-2.25-BX
3	2-1/4 Min	ZH60101F48-2.25	ZH60101F48-2.25-BX
3-1/2	2-1/4 Min	ZH60101F56-2.25	ZH60101F56-2.25-BX
4	2-1/4 Min	ZH60101F64-2.25	ZH60101F64-2.25-BX
5	2-1/4 Min	ZH60101F80-2.25	ZH60101F80-2.25-BX

1 1/4-7 Thread Size

Length	Full or Partial Threads	18-8 SS Part Number	18-8 SS, Bl Ox Part Number
1/4-7 x 2-1/2	Full	ZH6010014C40	ZH6010014C40-BX
1/4-7 x 2-3/4	Full	ZH6010014C44	ZH6010014C44-BX
1/4-7 x 3	Full	ZH6010014C48	ZH6010014C48-BX
1/4-7 x 3-1/4	Full	ZH6010014C52	ZH6010014C52-BX
1/4-7 x 3-1/2	2-3/4 Min	ZH6010014C56-2.75	ZH6010014C56-2.75-BX
1/4-7 x 4	2-3/4 Min	ZH6010014C64-2.75	ZH6010014C64-2.75-BX
1/4-7 x 4-1/2	2-3/4 Min	ZH6010014C72-2.75	ZH6010014C72-2.75-BX
1/4-7 x 5	2-3/4 Min	ZH6010014C80-2.75	ZH6010014C80-2.75-BX
1/4-7 x 5-1/2	2-3/4 Min	ZH6010014C88-2.75	ZH6010014C88-2.75-BX
1/4-7 x 6	2-3/4 Min	ZH6010014C96-2.75	ZH6010014C96-2.75-BX
1/4-7 x 6-1/4	3 Min	ZH6010014C100-3	ZH6010014C100-3-BX

Hex Head Cap Screws — Inch

18-8 SS | Plain | Black Oxide

1 1/4-7 Thread Size

Length	Full or Partial Threads	18-8 SS Part Number	18-8 SS, Bl Ox Part Number
1/4-7 x 6-1/2	3 Min	ZH6010014C104-3	ZH6010014C104-3-BX
1/4-7 x 7	3 Min	ZH6010014C112-3	ZH6010014C112-3-BX
1/4-7 x 8	3 Min	ZH6010014C128-3	ZH6010014C128-3-BX
1/4-7 x 8-1/2	3 Min	ZH6010014C136-3	ZH6010014C136-3-BX
1/4-7 x 9	3 Min	ZH6010014C144-3	ZH6010014C144-3-BX
1/4-7 x 10	3 Min	ZH6010014C160-3	ZH6010014C160-3-BX
1/4-7 x 10-1/2	3 Min	ZH6010014C168-3	ZH6010014C168-3-BX
1/4-7 x 12	3 Min	ZH6010014C192-3	ZH6010014C192-3-BX
1/4-7 x 18	3 Min	ZH6010014C288-3	ZH6010014C288-3-BX
1/4-7 x 20	3 Min	ZH6010014C320-3	ZH6010014C320-3-BX

1 3/8-6 Thread Size

Length	Full or Partial Threads	18-8 SS Part Number	18-8 SS, Bl Ox Part Number
1 3/8-6 x 3-1/2	Full	ZH6010013C56	ZH6010013C56-BX
1 3/8-6 x 4	3 Min	ZH6010013C64-3	ZH6010013C64-3-BX
1 3/8-6 x 5	3 Min	ZH6010013C80-3	ZH6010013C80-3-BX
1 3/8-6 x 6	3 Min	ZH6010013C96-3	ZH6010013C96-3-BX

1 1/2-6 Thread Size

Length	Full or Partial Threads	18-8 SS Part Number	18-8 SS, Bl Ox Part Number
1 1/2-6 x 3	Full	ZH6010013C48	ZH6010013C48-BX
1 1/2-6 x 3-1/2	Full	ZH6010013C56	ZH6010013C56-BX
4	3-1/4 Min	ZH6010013C64-3.25	ZH6010013C64-3.25-BX
4-1/2	3-1/4 Min	ZH6010013C72-3.25	ZH6010013C72-3.25-BX
5	3-1/4 Min	ZH6010013C80-3.25	ZH6010013C80-3.25-BX
5-1/2	3-1/4 Min	ZH6010013C88-3.25	ZH6010013C88-3.25-BX
6	3-1/4 Min	ZH6010013C96-3.25	ZH6010013C96-3.25-BX
6-1/2	3-1/4 Min	ZH6010013C104-3.5	ZH6010013C104-3.5-BX
7	3-1/4 Min	ZH6010013C112-3.5	ZH6010013C112-3.5-BX
7-1/2	3-1/4 Min	ZH6010013C120-3.5	ZH6010013C120-3.5-BX
8	3-1/4 Min	ZH6010013C128-3.5	ZH6010013C128-3.5-BX
9	3-1/4 Min	ZH6010013C144-3.5	ZH6010013C144-3.5-BX
11	3-1/4 Min	ZH6010013C176-3.5	ZH6010013C176-3.5-BX
18	3-1/4 Min	ZH6010013C288-3.5	ZH6010013C288-3.5-BX
20	3-1/4 Min	ZH6010013C320-3.5	ZH6010013C320-3.5-BX

Hex Head Cap Screws — Inch

316 SS | Plain | Black Oxide

Dimensions Table — Inch

Thread Size	Hex Size Across Flats	Head Height
2-56	1/8	1/16
4-40	3/16	1/16
6-32	1/4	3/32
8-32	1/4	7/64
10-24	5/16	1/8
10-32	5/16	1/8
12-24	5/16	5/32

2-56 Thread Size

Length	Full or Partial Threads	316 SS Part Number	316 SS, Bl Ox Part Number
3/16	Full	ZH60202C03	ZH60202C03-BX
1/4	Full	ZH60202C04	ZH60202C04-BX
3/8	Full	ZH60202C06	ZH60202C06-BX
1/2	Full	ZH60202C08	ZH60202C08-BX

4-40 Thread Size

Length	Full or Partial Threads	316 SS Part Number	316 SS, Bl Ox Part Number
3/16	Full	ZH60204C03	ZH60204C03-BX
1/4	Full	ZH60204C04	ZH60204C04-BX
5/16	Full	ZH60204C05	ZH60204C05-BX
3/8	Full	ZH60204C06	ZH60204C06-BX
1/2	Full	ZH60204C08	ZH60204C08-BX
5/8	Full	ZH60204C10	ZH60204C10-BX
3/4	Full	ZH60204C12	ZH60204C12-BX
1	Full	ZH60204C16	ZH60204C16-BX

6-32 Thread Size

Length	Full or Partial Threads	316 SS Part Number	316 SS, Bl Ox Part Number
1	Full	ZH60206C16	ZH60206C16-BX
1-1/4	Full	ZH60206C20	ZH60206C20-BX
1-1/2	Full	ZH60206C24	ZH60206C24-BX

8-32 Thread Size

Length	Full or Partial Threads	316 SS Part Number	316 SS, Bl Ox Part Number
1	Full	ZH60208C16	ZH60208C16-BX
1-1/4	Full	ZH60208C20	ZH60208C20-BX
1-1/2	Full	ZH60208C24	ZH60208C24-BX
1-3/4	Full	ZH60208C28	ZH60208C28-BX
2	Full	ZH60208C32	ZH60208C32-BX
2-1/2	1-1/2 Min.	ZH60208C40	ZH60208C40-BX

10-24 Thread Size

Length	Full or Partial Threads	316 SS Part Number	316 SS, Bl Ox Part Number
1-3/4	Full	ZH60210C28	ZH60210C28-BX
2	Full	ZH60210C32	ZH60210C32-BX
2-1/2	1-1/2 Min.	ZH60210C40	ZH60210C40-BX
3	1-1/2 Min.	ZH60210C48	ZH60210C48-BX

10-32 Thread Size

Length	Full or Partial Threads	316 SS Part Number	316 SS, Bl Ox Part Number
1-3/4	Full	ZH60210F28	ZH60210F28-BX
2	Full	ZH60210F32	ZH60210F32-BX
2-1/2	1-1/2 Min.	ZH60210F40	ZH60210F40-BX
3	1-1/2 Min.	ZH60210F48	ZH60210F48-BX

12-24 Thread Size

Length	Full or Partial Threads	316 SS Part Number	316 SS, Bl Ox Part Number
1/2	Full	ZH602#12C08	ZH602#12C08-BX
5/8	Full	ZH602#12C10	ZH602#12C10-BX
3/4	Full	ZH602#12C12	ZH602#12C12-BX
1	Full	ZH602#12C16	ZH602#12C16-BX

Hex Head Cap Screws — Inch

316 SS | Plain | Black Oxide

Dimensions Table — Inch

Thread Size	Hex Size Across Flats	Head Height
1/4-20	7/16	5/32
5/16-18	1/2	13/64
3/8-16	9/16	15/64
1/2-13	3/4	5/16
5/8-11	15/16	25/64
3/4-10	1-1/8	15/32

1/4-20 Thread Size

Length	Full or Partial Threads	316 SS Part Number	316 SS, Bl Ox Part Number
1/2	Full	ZH60214C08	ZH60214C08-BX
5/8	Full	ZH60214C10	ZH60214C10-BX
3/4	Full	ZH60214C12	ZH60214C12-BX
1	Full	ZH60214C16	ZH60214C16-BX
1-1/4	Full	ZH60214C20	ZH60214C20-BX
1-1/2	Full	ZH60214C24	ZH60214C24-BX
2	Full	ZH60214C32	ZH60214C32-BX
2-1/2	Full	ZH60214C40	ZH60214C40-BX

5/16-18 Thread Size

Length	Full or Partial Threads	316 SS Part Number	316 SS, Bl Ox Part Number
3/4	Full	ZH60251C12	ZH60251C12-BX
1	Full	ZH60251C16	ZH60251C16-BX
1-1/4	Full	ZH60251C20	ZH60251C20-BX
1-1/2	Full	ZH60251C24	ZH60251C24-BX
2	Full	ZH60251C32	ZH60251C32-BX
3	Full	ZH60251C48	ZH60251C48-BX
6-1/2	1-1/8 Min	ZS61251C104	ZS61251C104-BX

3/8-16 Thread Size

Length	Full or Partial Threads	316 SS Part Number	316 SS, Bl Ox Part Number
3/4	Full	ZH60238C12	ZH60238C12-BX
1	Full	ZH60238C16	ZH60238C16-BX
1-1/4	Full	ZH60238C20	ZH60238C20-BX
1-1/2	Full	ZH60238C24	ZH60238C24-BX
1-3/4	Full	ZH60238C28	ZH60238C28-BX
2	Full	ZH60238C32	ZH60238C32-BX
2-1/2	Full	ZH60238C40	ZH60238C40-BX
3	Full	ZH60238C48	ZH60238C48-BX
3-1/2	Full	ZH60238C56	ZH60238C56-BX
4	Full	ZH60238C64	ZH60238C64-BX

1/2-13 Thread Size

Length	Full or Partial Threads	316 SS Part Number	316 SS, Bl Ox Part Number
1	Full	ZH60212C16	ZH60212C16-BX
1-1/4	Full	ZH60212C20	ZH60212C20-BX
1-1/2	Full	ZH60212C24	ZH60212C24-BX
1-3/4	Full	ZH60212C28	ZH60212C28-BX
2	Full	ZH60212C32	ZH60212C32-BX
2-1/2	Full	ZH60212C40	ZH60212C40-BX
3	Full	ZH60212C48	ZH60212C48-BX
4	Full	ZH60212C64	ZH60212C64-BX

5/8-11 Thread Size

Length	Full or Partial Threads	316 SS Part Number	316 SS, Bl Ox Part Number
1-1/2	Full	ZH60258C24	ZH60258C24-BX
2	Full	ZH60258C32	ZH60258C32-BX
2-1/2	Full	ZH60258C40	ZH60258C40-BX
3	Full	ZH60258C48	ZH60258C48-BX

3/4-10 Thread Size

Length	Full or Partial Threads	316 SS Part Number	316 SS, Bl Ox Part Number
1-1/2	Full	ZH60234C24	ZH60234C24-BX
2	Full	ZH60234C32	ZH60234C32-BX
2-1/2	Full	ZH60234C40	ZH60234C40-BX
3	Full	ZH60234C48	ZH60234C48-BX
3-1/2	Full	ZH60234C56	ZH60234C56-BX
4	Full	ZH60234C64	ZH60234C64-BX

Hex Head Cap Screws — Inch

Brass | Plain

Dimensions Table — Inch

Thread Size	Hex Size Across Flats	Head Height
8-32	1/4	7/64
10-24	5/16	1/8
10-32	5/16	1/8
1/4-20	7/16	5/32
1/4-28	7/16	5/32
5/16-18	1/2	13/64
3/8-16	9/16	15/64
3/8-24	9/16	15/64
1/2-13	3/4	5/16
3/4-10	1-1/8	15/32

8-32 Thread Size

Length	Full or Partial Threads	Brass Part Number
3/8	Full	ZH40608C06
1/2	Full	ZH40608C08
5/8	Full	ZH40608C10
3/4	Full	ZH40608C12
1	Full	ZH40608C16
1 1/4	Full	ZH40608C20
1 1/2	Full	ZH40608C24

10-24 Thread Size

Length	Full or Partial Threads	Brass Part Number
3/8	Full	ZH40610C06
1/2	Full	ZH40610C08
5/8	Full	ZH40610C10
3/4	Full	ZH40610C12
1	Full	ZH40610C16
1 1/4	Full	ZH40610C20
1 1/2	Full	ZH40610C24

10-32 Thread Size

Length	Full or Partial Threads	Brass Part Number
3/8	Full	ZH40610F06
1/2	Full	ZH40610F08
5/8	Full	ZH40610F10
3/4	Full	ZH40610F12
1	Full	ZH40610F16
1 1/4	Full	ZH40610F20
1 1/2	Full	ZH40610F24

1/4-20 Thread Size

Length	Full or Partial Threads	Brass Part Number
3 1/2	3/4 Min	ZH40614C56
4	3/4 Min	ZH40614C64
4 1/2	3/4 Min	ZH40614C72
5	3/4 Min	ZH40614C80

1/4-28 Thread Size

Length	Full or Partial Threads	Brass Part Number
5/8	Full	ZH40614F10
1 1/4	3/4 Min	ZH40614F20
2	3/4 Min	ZH40614F32

5/16-18 Thread Size

Length	Full or Partial Threads	Brass Part Number
3 1/2	7/8 Min	ZH40651C56
4 1/2	7/8 Min	ZH40651C72
5	7/8 Min	ZH40651C80
6	7/8 Min	ZH40651C96

5/16-24 Thread Size

Length	Full or Partial Threads	Brass Part Number
3/4	Full	ZH40651F12
1	Full	ZH40651F16
1 1/4	Full	ZH40651F20
1 1/2	7/8 Min	ZH40651F24
2	7/8 Min	ZH40651F32

3/8-16 Thread Size

Length	Full or Partial Threads	Brass Part Number
4 1/2	1 Min	ZH40638C72
5	1 Min	ZH40638C80
5 1/2	1 Min	ZH40638C88
6	1 Min	ZH40638C96

3/8-24 Thread Size

Length	Full or Partial Threads	Brass Part Number
3/4	Full	ZH40638F12
1	Full	ZH40638F16
1 1/4	Full	ZH40638F20
1 1/2	1 Min	ZH40638F24
1 3/4	1 Min	ZH40638F28
2	1 Min	ZH40638F32
2 1/2	1 Min	ZH40638F40
3	1 Min	ZH40638F48

1/2-13 Thread Size

Length	Full or Partial Threads	Brass Part Number
5 1/2	1-1/4	ZH40612C88
6	1-1/4	ZH40612C96
6 1/2	1-1/2 Min	ZH40612C104
7	1-1/2 Min	ZH40612C112
8	1-1/2 Min	ZH40612C128

3/4-10 Thread Size

Length	Full or Partial Threads	Brass Part Number
3 1/2	1-3/4 Min	ZH40634C56

Hex Head Cap Screws — Inch

17-4 PH SS | Plain

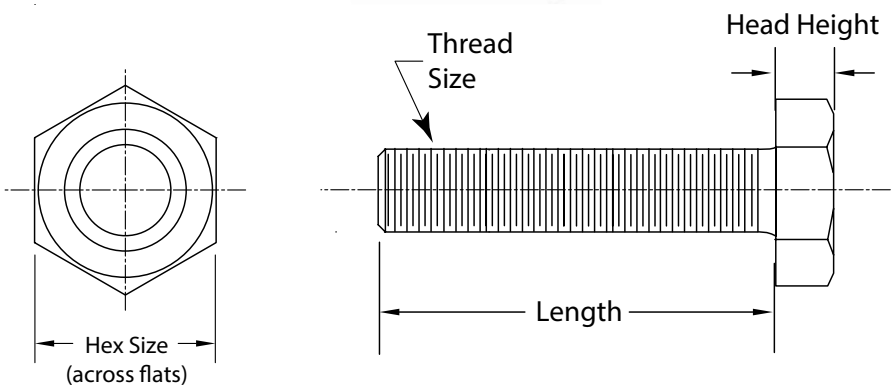

Dimensions Table — Inch

Thread Size	Head Diameter	Head Height
1/4-20	7/16	5/32
5/16-18	1/2	13/64
3/8-16	9/16	15/64
1/2-13	3/4	5/16

1/4-20 Thread Size

Length	Full or Partial Threads	17-4 PH SS Part Number
1/2	Full	ZH74414C08
3/4	Full	ZH74414C12
1	3/4 min	ZH74414C16
1-1/4	3/4 min	ZH74414C20
1-1/2	3/4 min	ZH74414C24
2	3/4 min	ZH74414C32

3/8-16 Thread Size

Length	Full or Partial Threads	17-4 PH SS Part Number
3/4	Full	ZH74438C12
1	Full	ZH74438C16
1-1/4	1 min	ZH74438C20
1-1/2	1 min	ZH74438C24
1-3/4	1 min	ZH74438C28
2	1 min	ZH74438C32
2-1/4	1 min	ZH74438C36
2-1/2	1 min	ZH74438C40
3	1 min	ZH74438C48

5/16-18 Thread Size

Length	Full or Partial Threads	17-4 PH SS Part Number
3/4	Full	ZH74451C12
1	Full	ZH74451C16
1-1/4	7/8 min	ZH74451C20
1-1/2	7/8 min	ZH74451C24
2	1-1/8 min	ZH74451C32

1/2-13 Thread Size

Length	Full or Partial Threads	17-4 PH SS Part Number
1	Full	ZH74412C16
1-1/4	Full	ZH74412C20
1-1/2	Full	ZH74412C24
1-3/4	1-1/4 min	ZH74412C28
2	1-1/4 min	ZH74412C32
2-1/2	1-1/4 min	ZH74412C40
3	1-1/4 min	ZH74412C48
3-1/2	1-1/4 min	ZH74412C56
4	1-1/4 min	ZH74412C64

Hex Head Cap Screws — Inch

316 H5 SS | Plain

Fully Threaded

Partially Threaded

Dimensions Table — Inch

Thread Size	Hex Size Across Flats	Head Height
4-40	3/16	1/16
6-32	1/4	3/32
8-32	1/4	7/64
10-32	5/16	1/8
1/4-20	7/16	5/32
5/16-18	1/2	13/64
3/8-16	9/16	15/64
1/2-13	3/4	5/16

4-40 Thread Size

Length	Full or Partial Threads	316 H5 Part Number
1/4	Full	ZS61604C04
5/16	Full	ZS61604C05
3/8	Full	ZS61604C06
1/2	Full	ZS61604C08

6-32 Thread Size

Length	Full or Partial Threads	316 H5 Part Number
1/4	Full	ZS61606C04
3/8	Full	ZS61606C06
1/2	Full	ZS61606C08
5/8	Full	ZS61606C10
3/4	Full	ZS61606C12

8-32 Thread Size

Length	Full or Partial Threads	316 H5 Part Number
3/8	Full	ZS61608C06
1/2	Full	ZS61608C08
5/8	Full	ZS61608C10
3/4	Full	ZS61608C12
1	Full	ZS61608C16

10-32 Thread Size

Length	Full or Partial Threads	316 H5 Part Number
3/8	Full	ZS61610F06
5/8	Full	ZS61610F10
3/4	Full	ZS61610F12
1	Full	ZS61610F16

1/4-20 Thread Size

Length	Full or Partial Threads	316 H5 Part Number
1/2	Full	ZS61614C08
5/8	Full	ZS61614C10
3/4	Full	ZS61614C12
7/8	Full	ZS61614C14
1	3/4 min	ZS61614C16
1-1/4	3/4 min	ZS61614C20
1-1/2	3/4 min	ZS61614C24
1-3/4	3/4 min	ZS61614C28
2	3/4 min	ZS61614C32

5/16-18 Thread Size

Length	Full or Partial Threads	316 H5 Part Number
3/4	Full	ZS61651C12
1	Full	ZS61651C16
1-1/4	7/8 min	ZS61651C20
1-1/2	7/8 min	ZS61651C24
2	1-1/8 min	ZS61651C32

3/8-16 Thread Size

Length	Full or Partial Threads	316 H5 Part Number
3/4	Full	ZS61638C12
1	Full	ZS61638C16
1-1/4	Full	ZS61638C20
1-1/2	1 min	ZS61638C24
1-3/4	1 min	ZS61638C28
2	1 min	ZS61638C32
2-1/2	1 min	ZS61638C40
3	1 min	ZS61638C48

1/2-13 Thread Size

Length	Full or Partial Threads	316 H5 Part Number
1	Full	ZS61612C16
1-1/4	Full	ZS61612C20
1-1/2	Full	ZS61612C24
1-3/4	1-1/4	ZS61612C28
2	1-1/4	ZS61612C32
2-1/2	1-1/4	ZS61612C40
3	1-1/4	ZS61612C48
3-1/2	1-1/4	ZS61612C56
4	1-1/4	ZS61612C64

Hex Head Cap Screws — Inch

A286 SS | Plain

8-32 Thread Size

Length	Full or Partial Threads	A286 SS Part Number
1/2	Full	ZH28608C08
5/8	Full	ZH28608C10
3/4	Full	ZH28608C12
1	Full	ZH28608C16

10-24 Thread Size

Length	Full or Partial Threads	A286 SS Part Number
1/2	Full	ZH28610C08
5/8	Full	ZH28610C10
3/4	Full	ZH28610C12
1	Full	ZH28610C16

10-32 Thread Size

Length	Full or Partial Threads	A286 SS Part Number
1/2	Full	ZH28610F08
5/8	Full	ZH28610F10
3/4	Full	ZH28610F12
1	Full	ZH28610F16

1/2-13 Thread Size

Length	Full or Partial Threads	A286 SS Part Number
3/4	Full	ZH28612C12
1	Full	ZH28612C16
1-1/4	Full	ZH28612C20
1-1/2	Full	ZH28612C24
1-3/4	Full	ZH28612C28
2	Full	ZH28612C32
2-1/4	Full	ZH28612C36
2-1/2	Full	ZH28612C40
2-3/4	Full	ZH28612C44
3	Full	ZH28612C48
3-1/4	Full	ZH28612C52
3-1/2	Full	ZH28612C56
4	Full	ZH28612C64
4-1/2	Full	ZH28612C72
5	Full	ZH28612C80
5-1/2	Full	ZH28612C88
6	Full	ZH28612C96

1/4-20 Thread Size

Length	Full or Partial Threads	A286 SS Part Number
3/8	Full	ZH28614C06
1/2	Full	ZH28614C08
5/8	Full	ZH28614C10
3/4	Full	ZH28614C12
7/8	Full	ZH28614C14
1	Full	ZH28614C16
1-1/8	Full	ZH28614C18
1-1/4	Full	ZH28614C20
1-1/2	Full	ZH28614C24
1-3/4	Full	ZH28614C28
2	Full	ZH28614C32
2-1/4	Full	ZH28614C36
2-1/2	Full	ZH28614C40
2-3/4	Full	ZH28614C44
3	Full	ZH28614C48
3-1/2	Full	ZH28614C56
4	Full	ZH28614C64

Hex Head Cap Screws — Inch

A286 SS | Plain

3/4-10 Thread Size

Length	Full or Partial Threads	A286 SS Part Number
1-1/2	Full	ZH28634C24
1-3/4	Full	ZH28634C28
2	Full	ZH28634C32
2-1/4	Full	ZH28634C36
2-1/2	Full	ZH28634C40
3	Full	ZH28634C48
3-1/2	Full	ZH28634C56
4	Full	ZH28634C64

3/8-16 Thread Size

Length	Full or Partial Threads	A286 SS Part Number
1/2	Full	ZH28638C08
5/8	Full	ZH28638C10
3/4	Full	ZH28638C12
7/8	Full	ZH28638C14
1	Full	ZH28638C16
1-1/8	Full	ZH28638C18
1-1/4	Full	ZH28638C20
1-1/2	Full	ZH28638C24
1-3/4	Full	ZH28638C28
2	Full	ZH28638C32
2-1/4	Full	ZH28638C36
2-1/2	Full	ZH28638C40
2-3/4	Full	ZH28638C44
3	Full	ZH28638C48
3-1/4	Full	ZH28638C52
3-1/2	Full	ZH28638C56
4	Full	ZH28638C64
4-1/2	Full	ZH28638C72
5	Full	ZH28638C80
6	Full	ZH28638C96

3/8-16 Thread Size

Length	Full or Partial Threads	A286 SS Part Number
1/2	Full	ZH28651C08
5/8	Full	ZH28651C10
3/4	Full	ZH28651C12
7/8	Full	ZH28651C14
1	Full	ZH28651C16
1-1/8	Full	ZH28651C18
1-1/4	Full	ZH28651C20
1-1/2	Full	ZH28651C24
1-3/4	Full	ZH28651C28
2	Full	ZH28651C32
2-1/4	Full	ZH28651C36
2-1/2	Full	ZH28651C40
2-3/4	Full	ZH28651C44
3	Full	ZH28651C48
3-1/2	Full	ZH28651C56
4	Full	ZH28651C64

5/8-11 Thread Size

Length	Full or Partial Threads	A286 SS Part Number
1	Full	ZH28658C16
1-1/4	Full	ZH28658C20
1-1/2	Full	ZH28658C24
1-3/4	Full	ZH28658C28
2	Full	ZH28658C32
2-1/4	Full	ZH28658C36
2-1/2	Full	ZH28658C40
2-3/4	Full	ZH28658C44
3	Full	ZH28658C48
3-1/2	Full	ZH28658C56
4	Full	ZH28658C64

5/8-18 Thread Size

Length	Full or Partial Threads	A286 SS Part Number
1-5/8	Full	ZH28658F26

Hex Head Cap Screws (fully threaded) — Inch

MADE IN THE USA

Aluminum | Plain | Black Anodized

Dimensions Table — Inch

Thread Size	Hex Size Across Flats	Head Height
6-32	1/4	3/32
8-32	1/4	7/64
10-24	5/16	1/8
10-32	5/16	1/8
12-24	5/16	5/32
1/4-20	7/16	5/32
1/4-28	7/16	5/32
5/16-18	1/2	13/64
3/8-16	9/16	15/64
3/8-24	9/16	15/64
1/2-13	3/4	5/16
3/4-10	1-1/8	15/32

6-32 Thread Size

Length	Aluminum Part Number
3/8	ZH72106C06
1/2	ZH72106C08
5/8	ZH72106C10
3/4	ZH72106C12
1	ZH72106C16
1-1/4	ZH72106C20
1-1/2	ZH72106C24

10-32 Thread Size

Length	Aluminum Part Number
3/8	ZH72110F06
1/2	ZH72110F08
5/8	ZH72110F10
3/4	ZH72110F12
1	ZH72110F16
1-1/4	ZH72110F20
1-1/2	ZH72110F24

8-32 Thread Size

Length	Aluminum Part Number
3/8	ZH72108C06
1/2	ZH72108C08
5/8	ZH72108C10
3/4	ZH72108C12
1	ZH72108C16
1-1/4	ZH72108C20
1-1/2	ZH72108C24

12-24 Thread Size

Length	Aluminum Part Number
3/8	ZH721#12C06
1/2	ZH721#12C08
3/4	ZH721#12C12
1	ZH721#12C16
1-1/4	ZH721#12C20
1-1/2	ZH721#12C24

1/4-28 Thread Size

Length	Aluminum Part Number
1/2	ZH72114F08
5/8	ZH72114F10
3/4	ZH72114F12
1	ZH72114F16
1-1/4	ZH72114F20
1-1/2	ZH72114F24
2	ZH72114F32
2-1/2	ZH72114F40

10-24 Thread Size

Length	Aluminum Part Number
3/8	ZH72110C06
1/2	ZH72110C08
5/8	ZH72110C10
3/4	ZH72110C12
1	ZH72110C16
1-1/4	ZH72110C20
1-1/2	ZH72110C24

1/4-20 Thread Size

Length	Aluminum Part Number	Aluminum, Bl. Anodized Part Number
1/2	ZH72114C08	ZH72114C08-BK
5/8	ZH72114C10	ZH72114C10-BK
3/4	ZH72114C12	ZH72114C12-BK
1	ZH72114C16	ZH72114C16-BK
1-1/4	ZH72114C20	ZH72114C20-BK
1-1/2	ZH72114C24	ZH72114C24-BK
2	ZH72114C32	ZH72114C32-BK
2-1/2	ZH72114C40	ZH72114C40-BK
3-1/2	ZH72114C56	—
4-1/2	ZH72114C72	—
5	ZH72114C80	—
5-1/2	ZH72114C88	—
6	ZH72114C96	—

5/16-18 Thread Size

Length	Aluminum Part Number	Aluminum, Bl. Anodized Part Number
3/4	ZH72151C12	ZH72151C12-BK
1	ZH72151C16	ZH72151C16-BK
1-1/4	ZH72151C20	ZH72151C20-BK
1-1/2	ZH72151C24	ZH72151C24-BK
2	ZH72151C32	ZH72151C32-BK
3	ZH72151C48	ZH72151C48-BK
3-1/2	ZH72151C56	—
4	ZH72151C64	—
4-1/2	ZH72151C72	—
5	ZH72151C80	—
5-1/2	ZH72151C88	—
6	ZH72151C96	—

Hex Head Cap Screws (fully threaded) — Inch

Aluminum | Plain | Black Anodized

5/16-24 Thread Size

Length	Aluminum Part Number
3/4	ZH72151F12
1	ZH72151F16
1-1/4	ZH72151F20
1-1/2	ZH72151F24
2	ZH72151F32
3	ZH72151F48

3/8-16 Thread Size

Length	Aluminum Part Number	Aluminum, Bl. Anodized Part Number
3/4	ZH72138C12	ZH72138C12-BK
1	ZH72138C16	ZH72138C16-BK
1-1/4	ZH72138C20	ZH72138C20-BK
1-1/2	ZH72138C24	ZH72138C24-BK
1-3/4	ZH72138C28	ZH72138C28-BK
2	ZH72138C32	ZH72138C32-BK
2-1/2	ZH72138C40	ZH72138C40-BK
3	ZH72138C48	ZH72138C48-BK
3-1/2	ZH72138C56	ZH72138C56-BK
4	ZH72138C64	ZH72138C64-BK
4-1/2	ZH72138C72	—
5-1/2	ZH72138C88	—
6	ZH72138C96	—

3/8-24 Thread Size

Length	Aluminum Part Number
3/4	ZH72138F12
1	ZH72138F16
1-1/4	ZH72138F20
1-1/2	ZH72138F24
1-3/4	ZH72138F28
2	ZH72138F32
2-1/2	ZH72138F40
3	ZH72138F48
3-1/2	ZH72138F56
4	ZH72138F64

1/2-13 Thread Size

Length	Aluminum Part Number	Aluminum, Bl. Anodized Part Number
1	ZH72112C16	ZH72112C16-BK
1-1/4	ZH72112C20	ZH72112C20-BK
1-1/2	ZH72112C24	ZH72112C24-BK
1-3/4	ZH72112C28	ZH72112C28-BK
2	ZH72112C32	ZH72112C32-BK
2-1/2	ZH72112C40	ZH72112C40-BK
3	ZH72112C48	ZH72112C48-BK
4	ZH72112C64	ZH72112C64-BK
5-1/2	ZH72112C88	—
6-1/2	ZH72112C104	—
7	ZH72112C112	—
8	ZH72112C128	—

5/8-11 Thread Size

Length	Aluminum Part Number	Aluminum, Bl. Anodized Part Number
1-1/2	ZH72158C24	ZH72158C24-BK
2	ZH72158C32	ZH72158C32-BK
2-1/2	ZH72158C40	ZH72158C40-BK
3	ZH72158C48	ZH72158C48-BK

3/4-10 Thread Size

Length	Aluminum Part Number	Aluminum, Bl. Anodized Part Number
2	ZH72134C32	ZH72134C32-BK
2-1/2	ZH72134C40	ZH72134C40-BK
3	ZH72134C48	ZH72134C48-BK
3-1/2	ZH72134C56	ZH72134C56-BK
4	ZH72134C64	ZH72134C64-BK
4-1/2	ZH72134C72	—
5	ZH72134C80	—
5-1/2	ZH72134C88	—
6	ZH72134C96	—

Hex Head Cap Screws — Metric

18-8 SS | Plain
316 SS | Plain | Black Oxide
316 H5 SS | Plain
A-286 SS | Plain
Aluminum | Plain | Black Anodized
Brass | Plain
17-4 PH SS | Plain

Product Information

A hex head bolt is a type of bolt characterized by its six-sided head, which is specifically designed to be tightened or loosened with a wrench or socket. These versatile bolts are widely used in a variety of applications, particularly in situations where strong clamping forces are essential. Their robust design and ease of installation make them a popular choice for everything from construction and automotive uses to machinery and general fastening needs. Fully threaded hex head screws can be screwed all the way into a threaded or tapped hole. Partially threaded hex head screws have an unthreaded portion under the head that adds strength but prevents them from being screwed all the way into a threaded hole. Partially Threaded screws meet DIN 931 / ISO 4014 , Fully Threaded screws meet DIN 933 / ISO 4017.
**Meets DIN 961 Fine Pitch Fully Threaded

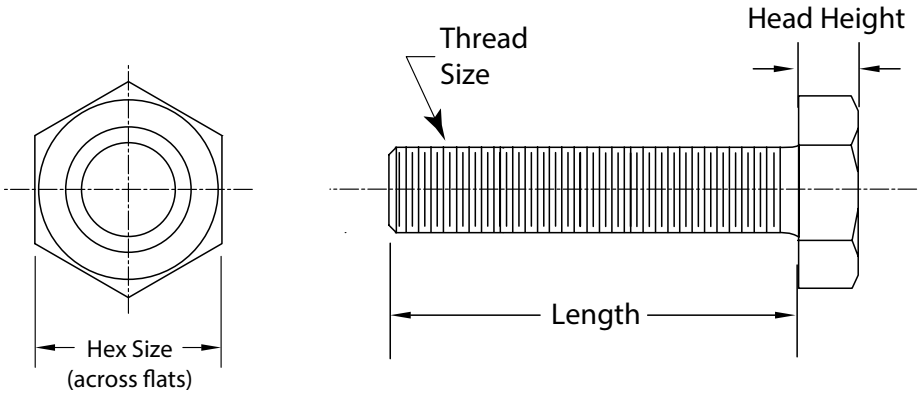

Dimensions Table — Metric

Thread Size	Hex Size	Head Height
M2 x 0.4mm	4.00	1.40
M3 x 0.5mm	5.50	2.00
M4 x 0.7mm	7.00	2.80
M5 x 0.8mm	8.00	3.50
M6 x 0.75mm **	10.00	4.00
M6 x 1mm	10.00	4.00
M7 x 1mm	11.00	5.00
M8 x 1mm **	13.00	5.30
M8 x 1.25mm	13.00	5.30
M10 x 1.25mm **	17.00	6.40
M10 x 1.5mm	17.00	6.40
M12 x 1.5mm **	19.00	7.50
M12 x 1.75mm	19.00	7.50
M14 x 2mm	22.00	8.80
M16 x 2mm	24.00	10.00
M18 x 2.5mm	27.00	11.50
M20 x 2.5mm	30.00	12.50
M22 x 2.5mm	32.00	14.00
M24 x 3mm	36.00	15.00

***Meets DIN 961 Fine Pitch Fully Threaded*
***bolded parts are fine thread*

Hex Head Cap Screws — Metric

18-8 SS | Plain

M3 x 0.5 Thread Size

Length	Full or Partial Threads	18-8 SS Part Number
6	Full	ZH601M3C6
8	Full	ZH601M3C8
10	Full	ZH601M3C10
12	Full	ZH601M3C12
14	Full	ZH601M3C14
16	Full	ZH601M3C16
18	Full	ZH601M3C18
20	Full	ZH601M3C20
25	Full	ZH601M3C25
30	Full	ZH601M3C30
35	Full	ZH601M3C35
40	Full	ZH601M3C40
45	Full	ZH601M3C45
50	Full	ZH601M3C50

M4 x 0.7 Thread Size

Length	Full or Partial Threads	18-8 SS Part Number
6	Full	ZH601M4C6
8	Full	ZH601M4C8
10	Full	ZH601M4C10
12	Full	ZH601M4C12
16	Full	ZH601M4C16
18	Full	ZH601M4C18
20	Full	ZH601M4C20
25	Full	ZH601M4C25
30	Full	ZH601M4C30
35	Full	ZH601M4C35
40	Full	ZH601M4C40
45	Full	ZH601M4C45
50	Full	ZH601M4C50
60	Full	ZH601M4C60
70	Full	ZH601M4C70

M5 x 0.8 Thread Size

Length	Full or Partial Threads	18-8 SS Part Number
6	Full	ZH601M5C6
8	Full	ZH601M5C8
30	16 Min	ZH601M5C30-16
35	16 Min	ZH601M5C35-16
40	16 Min	ZH601M5C40-16
45	16 Min	ZH601M5C45-16
50	16 Min	ZH601M5C50-16
55	16 Min	ZH601M5C55-16
60	16 Min	ZH601M5C60-16
65	16 Min	ZH601M5C65-16
70	16 Min	ZH601M5C70-16
75	16 Min	ZH601M5C75-16
80	16 Min	ZH601M5C80-16

M6 x 1 Thread Size

Length	Full or Partial Threads	18-8 SS Part Number
30	18 Min	ZH601M6C30-18
35	18 Min	ZH601M6C35-18
45	18 Min	ZH601M6C45-18
55	18 Min	ZH601M6C55-18
60	18 Min	ZH601M6C60-18
65	18 Min	ZH601M6C65-18
75	Full	ZH601M6C75
12	Full	ZH601M6F12
14	Full	ZH601M6F14
16	Full	ZH601M6F16
20	Full	ZH601M6F20
25	Full	ZH601M6F25
30	Full	ZH601M6F30
40	Full	ZH601M6F40

M6 x 0.75 Thread Size

Length	Full or Partial Threads	18-8 SS Part Number
12	Full	ZH601M6F12
14	Full	ZH601M6F14
16	Full	ZH601M6F16
20	Full	ZH601M6F20
25	Full	ZH601M6F25
30	Full	ZH601M6F30
40	Full	ZH601M6F40

M8 x 1 Thread Size

Length	Full or Partial Threads	18-8 SS Part Number
16	Full	ZH601M8F16
20	Full	ZH601M8F20
25	Full	ZH601M8F25
30	Full	ZH601M8F30
35	Full	ZH601M8F35
40	Full	ZH601M8F40
50	Full	ZH601M8F50

M8 x 1.25 Thread Size

Length	Full or Partial Threads	18-8 SS Part Number
8	Full	ZH601M8C8
15	Full	ZS615M8X15
30	22 Min	ZH601M8C30-22
35	22 Min	ZH601M8C35-22
65	22 Min	ZH601M8C65-22
75	22 Min	ZH601M8C75-22
85	22 Min	ZH601M8C85-22
110	Full	ZH601M8C110
110	22 Min	ZH601M8C110-22
120	Full	ZH601M8C120
120	22 Min	ZH601M8C120-22
130	Full	ZH601M8C130
130	28 Min	ZH601M8C130-28
140	Full	ZH601M8C140
140	28 Min	ZH601M8C140-28
150	Full	ZH601M8C150
150	28 Min	ZH601M8C150-28
160	28 Min	ZH601M8C160-28
170	28 Min	ZH601M8C170-28
180	28 Min	ZH601M8C180-28
190	28 Min	ZH601M8C190-28
200	28 Min	ZH601M8C200-28

Hex Head Cap Screws — Metric

18-8 SS | Plain

M10 x 1.25 Thread Size

Length	Full or Partial Threads	18-8 SS Part Number
20	Full	ZH601M10F20
25	Full	ZH601M10F25
30	Full	ZH601M10F30
35	Full	ZH601M10F35
40	Full	ZH601M10F40

M10 x 1.5 Thread Size

Length	Full or Partial Threads	18-8 SS Part Number
35	26 Min	ZH601M10C35-26
45	26 Min	ZH601M10C45-26
55	26 Min	ZH601M10C55-26
60	26 Min	ZH601M10C60-26
65	26 Min	ZH601M10C65-26
75	26 Min	ZH601M10C75-26
85	26 Min	ZH601M10C85-26
110	Full	ZH601M10C110
110	26 Min	ZH601M10C110-26
120	Full	ZH601M10C120
120	26 Min	ZH601M10C120-26
130	Full	ZH601M10C130
130	32 Min	ZH601M10C130-32
140	Full	ZH601M10C140
140	32 Min	ZH601M10C140-32
150	32 Min	ZH601M10C150-32
160	32 Min	ZH601M10C160-32
170	32 Min	ZH601M10C170-32
180	32 Min	ZH601M10C180-32
190	32 Min	ZH601M10C190-32
200	32 Min	ZH601M10C200-32

M12 x 1.75 Thread Size

Length	Full or Partial Threads	18-8 SS Part Number
12	Full	ZH601M12C12
18	Full	ZH601M12C18
30	Full	ZH601M12X30
40	30 Min	ZH601M12C40-30
45	30 Min	ZH601M12C45-30
50	30 Min	ZH601M12C50-30
55	30 Min	ZH601M12C55-30
60	30 Min	ZH601M12C60-30
65	30 Min	ZH601M12C65-30
75	Full	ZH601M12C75
75	30 Min	ZH601M12C75-30
80*	Full	ZS615M12X80
140	36 Min	ZH601M12C140-36
150	36 Min	ZH601M12C150-36
160	36 Min	ZH601M12C160-36
170	36 Min	ZH601M12C170-36
180	36 Min	ZH601M12C180-36
190	36 Min	ZH601M12C190-36
200	36 Min	ZH601M12C200-36

**18 mm Head Width*

M14 x 2 Thread Size

Length	Full or Partial Threads	18-8 SS Part Number
20	Full	ZH601M14C20
25	Full	ZH601M14C25
30	Full	ZH601M14C30
35	Full	ZH601M14C35
40	Full	ZH601M14C40
45	Full	ZH601M14C45
50	Full	ZH601M14C50
50	34 Min	ZH601M14C50-34
55	Full	ZH601M14C55
60	Full	ZH601M14C60
60	34 Min	ZH601M14C60-34
65	Full	ZH601M14C65
65	34 Min	ZH601M14C65-34

Hex Head Cap Screws — Metric

18-8 SS | Plain

M14 x 2 Thread Size

Length	Full or Partial Threads	18-8 SS Part Number
70	Full	ZH601M14C70
70	34 Min	ZH601M14C70-34
75	Full	ZH601M14C75
80	Full	ZH601M14C80
80	34 Min	ZH601M14C80-34
90	Full	ZH601M14C90
90	34 Min	ZH601M14C90-34
100	Full	ZH601M14C100
100	34 Min	ZH601M14C100-34
110	Full	ZH601M14C110
110	34 Min	ZH601M14C110-34
120	Full	ZH601M14C120
120	34 Min	ZH601M14C120-34
130	40 Min	ZH601M14C130-40
140	40 Min	ZH601M14C140-40
150	40 Min	ZH601M14C150-40
160	40 Min	ZH601M14C160-40
170	40 Min	ZH601M14C170-40
180	40 Min	ZH601M14C180-40
190	40 Min	ZH601M14C190-40
200	40 Min	ZH601M14C200-40

M16 x 2 Thread Size

Length	Full or Partial Threads	18-8 SS Part Number
20	Full	ZH601M16C20
45	38 Min	ZH601M16C45-38
50	38 Min	ZH601M16C50-38
55	38 Min	ZH601M16C55-38
60	38 Min	ZH601M16C60-38
70	38 Min	ZH601M16C70-38
75	38 Min	ZH601M16C75-38
80	38 Min	ZH601M16C80-38
90	Full	ZH601M16C90

M16 x 2 Thread Size

Length	Full or Partial Threads	18-8 SS Part Number
90	38 Min	ZH601M16C90-38
100	Full	ZH601M16C100
100	38 Min	ZH601M16C100-38
110	38 Min	ZH601M16C110-38
120	Full	ZH601M16C120
120	38 Min	ZH601M16C120-38
130	Full	ZH601M16C130
130	44 Min	ZH601M16C130-44
140	Full	ZH601M16C140
140	44 Min	ZH601M16C140-44
160	44 Min	ZH601M16C160-44
170	44 Min	ZH601M16C170-44
180	44 Min	ZH601M16C180-44
190	44 Min	ZH601M16C190-44
200	44 Min	ZH601M16C200-44

M18 x 2.5 Thread Size

Length	Full or Partial Threads	18-8 SS Part Number
30	Full	ZH601M18C30
35	Full	ZH601M18C35
40	Full	ZH601M18C40
45	Full	ZH601M18C45
50	Full	ZH601M18C50
55	Full	ZH601M18C55
60	Full	ZH601M18C60
60	42 Min	ZH601M18C60-42
65	Full	ZH601M18C65
70	Full	ZH601M18C70
70	42 Min	ZH601M18C70-42
75	Full	ZH601M18C75
80	Full	ZH601M18C80
80	42 Min	ZH601M18C80-42
90	Full	ZH601M18C90
90	42 Min	ZH601M18C90-42

Hex Head Cap Screws — Metric

18-8 SS | Plain

M18 x 2.5 Thread Size

Length	Full or Partial Threads	18-8 SS Part Number
100	Full	ZH601M18C100
100	42 Min	ZH601M18C100-42
110	42 Min	ZH601M18C110-42
120	Full	ZH601M18C120
120	42 Min	ZH601M18C120-42
130	Full	ZH601M18C130
130	48 Min	ZH601M18C130-48
150	48 Min	ZH601M18C150-48
170	48 Min	ZH601M18C170-48
180	48 Min	ZH601M18C180-48
200	48 Min	ZH601M18C200-48

M20 x 2.5 Thread Size

Length	Full or Partial Threads	18-8 SS Part Number
30	Full	ZH601M20C30
35	Full	ZH601M20C35
40	Full	ZH601M20C40
45	Full	ZH601M20C45
50	Full	ZH601M20C50
55	Full	ZH601M20C55
60	Full	ZH601M20C60
60	46 Min	ZH601M20C60-46
65	Full	ZH601M20C65
65	46 Min	ZH601M20C65-46
70	Full	ZH601M20C70
70	46 Min	ZH601M20C70-46
75	Full	ZH601M20C75
80	Full	ZH601M20C80
80	46 Min	ZH601M20C80-46
90	Full	ZH601M20C90
90	46 Min	ZH601M20C90-46

M20 x 2.5 Thread Size

Length	Full or Partial Threads	18-8 SS Part Number
100	Full	ZH601M20C100
100	46 Min	ZH601M20C100-46
110	Full	ZH601M20C110
120	Full	ZH601M20C120
120	46 Min	ZH601M20C120-46
130	Full	ZH601M20C130
130	52 Min	ZH601M20C130-52
140	Full	ZH601M20C140
140	52 Min	ZH601M20C140-52
150	52 Min	ZH601M20C150-52
160	52 Min	ZH601M20C160-52
170	52 Min	ZH601M20C170-52
180	52 Min	ZH601M20C180-52
190	52 Min	ZH601M20C190-52
200	52 Min	ZH601M20C200-52

M22 x 2.5 Thread Size

Length	Full or Partial Threads	18-8 SS Part Number
50	Full	ZH601M22C50
60	Full	ZH601M22C60
75	Full	ZH601M22C75
80	Full	ZH601M22C80
80	50 Min	ZH601M22C80-50
100	Full	ZH601M22C100
100	50 Min	ZH601M22C100-50
110	50 Min	ZH601M22C110-50
120	50 Min	ZH601M22C120-50
130	56 Min	ZH601M22C130-56
140	56 Min	ZH601M22C140-56
150	56 Min	ZH601M22C150-56
170	56 Min	ZH601M22C170-56
180	56 Min	ZH601M22C180-56
200	56 Min	ZH601M22C200-56

M24 x 3 Thread Size

Length	Full or Partial Threads	18-8 SS Part Number
40	Full	ZH601M24C40
50	Full	ZH601M24C50
55	Full	ZH601M24C55
60	Full	ZH601M24C60
65	Full	ZH601M24C65
70	Full	ZH601M24C70
75	Full	ZH601M24C75
75	54 Min	ZH601M24C75-54
80	Full	ZH601M24C80
80	54 Min	ZH601M24C80-54
85	Full	ZH601M24C85
90	Full	ZH601M24C90
90	54 Min	ZH601M24C90-54
100	Full	ZH601M24C100
100	54 Min	ZH601M24C100-54
110	Full	ZH601M24C110
110	54 Min	ZH601M24C110-54
120	Full	ZH601M24C120
120	54 Min	ZH601M24C120-54
130	Full	ZH601M24C130
140	Full	ZH601M24C140
150	60 Min	ZH601M24C150-60
160	60 Min	ZH601M24C160-60
170	60 Min	ZH601M24C170-60
180	60 Min	ZH601M24C180-60
190	60 Min	ZH601M24C190-60
200	60 Min	ZH601M24C200-60

Hex Head Cap Screws — Metric

316 SS | Plain | Black Oxide

Dimensions Table — Metric

Thread Size	Head Diameter	Head Height
M6 x 1mm	10.00	4.00
M8 x 1mm	13.00	5.30
M8 x 1.25mm	13.00	5.30
M10 x 1.25mm	17.00	6.40
M10 x 1.5mm	17.00	6.40
M12 x 1.75mm	19.00	7.50

M3 x 0.5mm Thread Size

Length	Full or Partial Threads	316 SS Part Number	316 SS, Bl Ox. Part Number
35	Full	ZH602M3CX35	ZH602M3CX35-BX
40	Full	ZH602M3CX40	ZH602M3CX40-BX
45	Full	ZH602M3CX45	ZH602M3CX45-BX
50	Full	ZH602M3CX50	ZH602M3CX50-BX

M4 x 0.7mm Thread Size

Length	Full or Partial Threads	316 SS Part Number	316 SS, Bl Ox. Part Number
40	Full	ZH602M4CX40	ZH602M4CX40-BX
45	Full	ZH602M4CX45	ZH602M4CX45-BX
50	Full	ZH602M4CX50	ZH602M4CX50-BX
55	Full	ZH602M4CX55	ZH602M4CX55-BX
60	Full	ZH602M4CX60	ZH602M4CX60-BX

M5 x 0.8mm Thread Size

Length	Full or Partial Threads	316 SS Part Number	316 SS, Bl Ox. Part Number
50	Full	ZH602M5CX50	ZH602M5CX50-BX
55	Full	ZH602M5CX55	ZH602M5CX55-BX
60	Full	ZH602M5CX60	ZH602M5CX60-BX

M6 x 1mm Thread Size

Length	Full or Partial Threads	316 SS Part Number	316 SS, Bl Ox. Part Number
12	Full	ZH602M6CX12	ZH602M6CX12-BX
16	Full	ZH602M6CX16	ZH602M6CX16-BX
20	Full	ZH602M6CX20	ZH602M6CX20-BX
25	Full	ZH602M6CX25	ZH602M6CX25-BX
30	Full	ZH602M6CX30	ZH602M6CX30-BX
40	Full	ZH602M6CX40	ZH602M6CX40-BX

M8 x 1mm Thread Size

Length	Full or Partial Threads	316 SS Part Number	316 SS, Bl Ox. Part Number
10	Full	ZH602M8FX10	ZH602M8FX10-BX
12	Full	ZH602M8FX12	ZH602M8FX12-BX
14	Full	ZH602M8FX14	ZH602M8FX14-BX
16	Full	ZH602M8FX16	ZH602M8FX16-BX
18	Full	ZH602M8FX18	ZH602M8FX18-BX
20	Full	ZH602M8FX20	ZH602M8FX20-BX
22	Full	ZH602M8FX22	ZH602M8FX22-BX
25	Full	ZH602M8FX25	ZH602M8FX25-BX
30	Full	ZH602M8FX30	ZH602M8FX30-BX
35	Full	ZH602M8FX35	ZH602M8FX35-BX
40	Full	ZH602M8FX40	ZH602M8FX40-BX
45	Full	ZH602M8FX45	ZH602M8FX45-BX
50	Full	ZH602M8FX50	ZH602M8FX50-BX
55	Full	ZH602M8FX55	ZH602M8FX55-BX
60	Full	ZH602M8FX60	ZH602M8FX60-BX

Hex Head Cap Screws — Metric

316 SS | Plain | Black Oxide

Dimensions Table — Metric

Thread Size	Head Diameter	Head Height
M6 x 1mm	10.00	4.00
M8 x 1mm	13.00	5.30
M8 x 1.25mm	13.00	5.30
M10 x 1.25mm	17.00	6.40
M10 x 1.5mm	17.00	6.40
M12 x 1.75mm	19.00	7.50

M8 x 1.25mm Thread Size

Length	Full or Partial Threads	316 SS Part Number	316 SS, Bl Ox. Part Number
16	Full	ZH602M8CX16	ZH602M8CX16-BX
20	Full	ZH602M8CX20	ZH602M8CX20-BX
25	Full	ZH602M8CX25	ZH602M8CX25-BX
30	Full	ZH602M8CX30	ZH602M8CX30-BX
35	Full	ZH602M8CX35	ZH602M8CX35-BX
40	Full	ZH602M8CX40	ZH602M8CX40-BX
45	Full	ZH602M8CX45	ZH602M8CX45-BX
50	Full	ZH602M8CX50	ZH602M8CX50-BX
60	Full	ZH602M8CX60	ZH602M8CX60-BX

M10 x 1.25mm Thread Size

Length	Full or Partial Threads	316 SS Part Number	316 SS, Bl Ox. Part Number
16	Full	ZH602M10FX16	ZH602M10FX16-BX
20	Full	ZH602M10FX20	ZH602M10FX20-BX
25	Full	ZH602M10FX25	ZH602M10FX25-BX
30	Full	ZH602M10FX30	ZH602M10FX30BX
35	Full	ZH602M10FX35	ZH602M10FX35-BX
40	Full	ZH602M10FX40	ZH602M10FX40-BX
45	Full	ZH602M10FX45	ZH602M10FX45-BX
50	Full	ZH602M10FX50	ZH602M10FX50-BX
55	Full	ZH602M10FX55	ZH602M10FX55-BX
60	Full	ZH602M10FX60	ZH602M10FX60-BX

M10 x 1.5mm Thread Size

Length	Full or Partial Threads	316 SS Part Number	316 SS, Bl Ox. Part Number
16	Full	ZH602M10X16	ZH602M10X16-BX
20	Full	ZH602M10CX20	ZH602M10CX20-BX
25	Full	ZH602M10CX25	ZH602M10CX25-BX
30	Full	ZH602M10CX30	ZH602M10CX30-BX
35	Full	ZH602M10CX35	ZH602M10CX35-BX
40	Full	ZH602M10CX40	ZH602M10CX40-BX
45	Full	ZH602M10CX45	ZH602M10CX45-BX
50	Full	ZH602M10CX50	ZH602M10CX50-BX
60	Full	ZH602M10CX60	ZH602M10CX60-BX

M12 x 1.5mm Thread Size

Length	Full or Partial Threads	316 SS Part Number	316 SS, Bl Ox. Part Number
20	Full	ZH602M12FX20	ZH602M12FX20-BX
25	Full	ZH602M12FX25	ZH602M12FX25-BX
30	Full	ZH602M12FX30	ZH602M12FX30-BX
35	Full	ZH602M12FX35	ZH602M12FX35-BX
40	Full	ZH602M12FX40	ZH602M12FX40-BX
45	Full	ZH602M12FX45	ZH602M12FX45-BX
50	Full	ZH602M12FX50	ZH602M12FX50-BX
55	Full	ZH602M12FX55	ZH602M12FX55-BX
60	Full	ZH602M12FX60	ZH602M12FX60-BX

M12 x 1.75mm Thread Size

Length	Full or Partial Threads	316 SS Part Number	316 SS, Bl Ox. Part Number
25	Full	ZH602M12CX25	ZH602M12CX25-BX
30	Full	ZH602M12CX30	ZH602M12CX30-BX
35	Full	ZH602M12CX35	ZH602M12CX35-BX
40	Full	ZH602M12CX40	ZH602M12CX40-BX
50	Full	ZH602M12CX50	ZH602M12CX50-BX
60	Full	ZH602M12CX60	ZH602M12CX60-BX

Hex Head Cap Screws — Metric

316 H5 SS | Plain

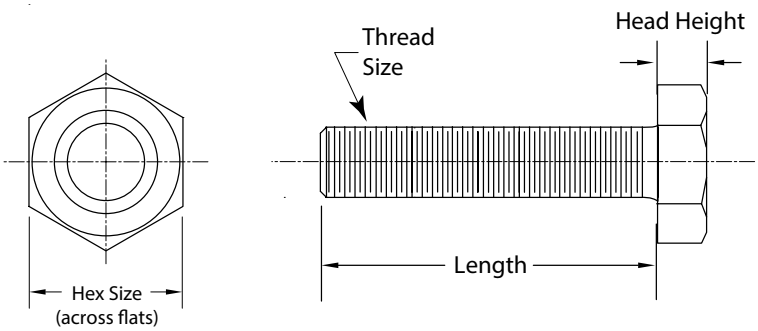

Dimensions Table — Metric

Thread Size	Head Diameter	Head Height
M2 x 0.4mm	4.00	1.40
M3 x 0.5mm	5.50	2.00
M4 x 0.7mm	7.00	2.80
M5 x 0.8mm	8.00	3.50
M6 x 1mm	10.00	4.00
M8 x 1.25mm	13.00	5.30
M10 x 1.5mm	17.00	6.40
M12 x 1.75mm	18.00	7.50

M2 x 0.4mm Thread Size

Length	Full or Partial Threads	316 H5 SS Part Number
6	Full	ZS616M2X6
8	Full	ZS616M2X8

M3 x 0.5mm Thread Size

Length	Full or Partial Threads	316 H5 SS Part Number
6	Full	ZS616M3X6
8	Full	ZS616M3X8
10	Full	ZS616M3X10
12	Full	ZS616M3X12
14	Full	ZS616M3X14
16	Full	ZS616M3X16

M4 x 0.7mm Thread Size

Length	Full or Partial Threads	316 H5 SS Part Number
8	Full	ZS616M4X8
10	Full	ZS616M4X10
12	Full	ZS616M4X12
14	Full	ZS616M4X14
16	Full	ZS616M4X16
20	Full	ZS616M4X20
25	Full	ZS616M4X25
30	Full	ZS616M4X30

M5 x 0.8mm Thread Size

Length	Full or Partial Threads	316 H5 SS Part Number
10	Full	ZS616M5X10
12	Full	ZS616M5X12
14	Full	ZS616M5X14
16	Full	ZS616M5X16
20	Full	ZS616M5X20
25	Full	ZS616M5X25

M6 x 1mm Thread Size

Length	Full or Partial Threads	316 H5 Part Number
10	Full	ZS616M6X10
12	Full	ZS616M6X12
14	Full	ZS616M6X14
16	Full	ZS616M6X16
20	Full	ZS616M6X20
25	Full	ZS616M6X25
30	Full	ZS616M6X30
35	Full	ZS616M6X35
40	22 Min	ZS616M6X40

M8 x 1.25mm Thread Size

Length	Full or Partial Threads	316 H5 Part Number
16	Full	ZS616M8X16
20	Full	ZS616M8X20
25	Full	ZS616M8X25
30	Full	ZS616M8X30
35	Full	ZS616M8X35
40	Full	ZS616M8X40
50	Full	ZS616M8X50

M10 x 1.5mm Thread Size

Length	Full or Partial Threads	316 H5 Part Number
25	Full	ZS616M10X25
30	Full	ZS616M10X30
35	Full	ZS616M10X35
40	Full	ZS616M10X40
50	Full	ZS616M10X50

M12 x 1.75mm Thread Size

Length	Full or Partial Threads	316 H5 Part Number
30	Full	ZS616M12X30
35	Full	ZS616M12X35
40	Full	ZS616M12X40
50	Full	ZS616M12X50

Hex Head Cap Screws — Metric

A286 SS | Plain

M4 x 0.7mm Thread Size

Length	Full or Partial Threads	A286 SS Part Number
8	Full	ZH286M4CX8
10	Full	ZH286M4CX10
12	Full	ZH286M4CX12
16	Full	ZH286M4CX16
20	Full	ZH286M4CX20
25	Full	ZH286M4CX25

M5 x 0.8mm Thread Size

Length	Full or Partial Threads	A286 SS Part Number
10	Full	ZH286M5CX10
12	Full	ZH286M5CX12
16	Full	ZH286M5CX16
20	Full	ZH286M5CX20
25	Full	ZH286M5CX25

M6 x 1mm Thread Size

Length	Full or Partial Threads	A286 SS Part Number
10	Full	ZH286M6CX10
12	Full	ZH286M6CX12
14	Full	ZH286M6CX14
15	Full	ZH286M6CX15
16	Full	ZH286M6CX16
18	Full	ZH286M6CX18
20	Full	ZH286M6CX20
25	Full	ZH286M6CX25
30	Full	ZH286M6CX30
35	Full	ZH286M6CX35
40	Full	ZH286M6CX40
50	Full	ZH286M6CX50

M8 x 1.25mm Thread Size

Length	Full or Partial Threads	A286 SS Part Number
12	Full	ZH286M8CX12
16	Full	ZH286M8CX16
18	Full	ZH286M8CX18
20	Full	ZH286M8CX20
25	Full	ZH286M8CX25
30	Full	ZH286M8CX30
40	Full	ZH286M8CX40
50	Full	ZH286M8CX50
60	Full	ZH286M8CX60

M10 x 1.5mm Thread Size

Length	Full or Partial Threads	A286 SS Part Number
16	Full	ZH286M10CX16
20	Full	ZH286M10CX20
25	Full	ZH286M10CX25
30	Full	ZH286M10CX30
40	Full	ZH286M10CX40
50	Full	ZH286M10CX50

M12 x 1.75mm Thread Size

Length	Full or Partial Threads	A286 SS Part Number
25	Full	ZH286M12CX25
30	Full	ZH286M12CX30
35	Full	ZH286M12CX35
40	Full	ZH286M12X40

Hex Head Cap Screws (fully threaded) — Metric

Aluminum | Plain

Product Information

These fully threaded hex head screws can be screwed all the way into a threaded or tapped hole. Aluminum 7075T6 screws are lightweight, resist corrosion in wet environments and nonmagnetic. Screws have a Class 6g thread fit. Theses fully threaded screws meet DIN 933 / ISO 4017.

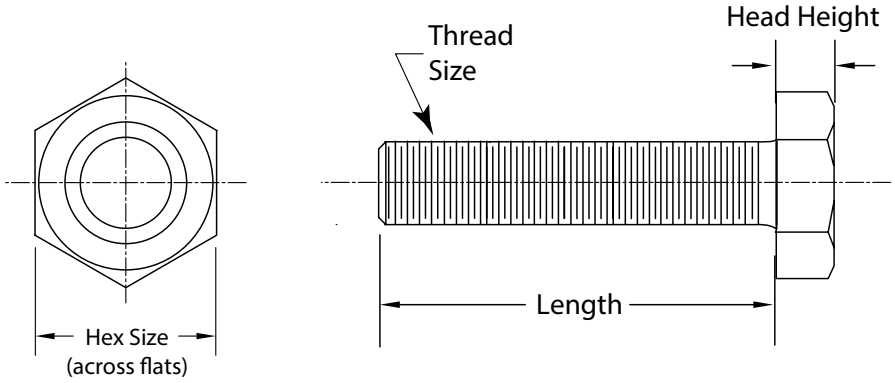

Dimensions Table — Metric

Thread Size	Hex Size	Head Height
M2 x 0.4mm	4.00	1.40
M3 x 0.5mm	5.50	2.00
M4 x 0.7mm	7.00	2.80
M5 x 0.8mm	8.00	3.50

M2 x 0.4mm Thread Size

Lg.	7075T6 Aluminum Part Number
6	ZH707M2X6
8	ZH707M2X8
10	ZH707M2X10
12	ZH707M2X12
14	ZH707M2X14
16	ZH707M2X16
18	ZH707M2X18
20	ZH707M2X20
25	ZH707M2X25

M3 x 0.5mm Thread Size

Lg.	7075T6 Aluminum Part Number
6	ZH707M3X6
8	ZH707M3X8
10	ZH707M3X10
12	ZH707M3X12
14	ZH707M3X14
16	ZH707M3X16
18	ZH707M3X18
20	ZH707M3X20
25	ZH707M3X25

M4 x 0.7mm Thread Size

Lg.	7075T6 Aluminum Part Number
6	ZH707M4X6
8	ZH707M4X8
10	ZH707M4X10
12	ZH707M4X12
14	ZH707M4X14
16	ZH707M4X16
18	ZH707M4X18
20	ZH707M4X20
25	ZH707M4X25

M5 x 0.8mm Thread Size

Lg.	7075T6 Aluminum Part Number
6	ZH707M5X6
8	ZH707M5X8
10	ZH707M5X10
12	ZH707M5X12
14	ZH707M5X14
16	ZH707M5X16
18	ZH707M5X18
20	ZH707M5X20
25	ZH707M5X25

Hex Head Cap Screws (fully threaded) — Metric

Aluminum | Plain | Black Anodized

Product Information

These fully threaded hex head screws can be screwed all the way into a threaded or tapped hole. Aluminum 2024T4 screws are lightweight, resist corrosion in wet environments and nonmagnetic. Screws have a Class 6g thread fit. Theses fully threaded screws meet DIN 933 / ISO 4017. Fine Thread meet DIN 961.

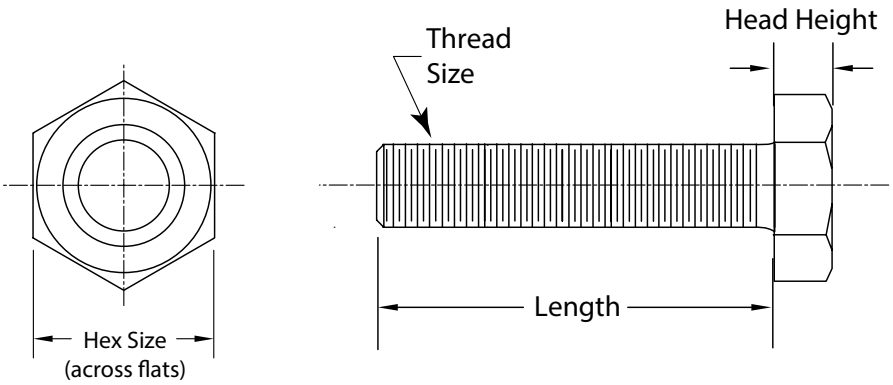

Dimensions Table — Metric

Thread Size	Hex Size	Head Height
M6 x 1mm	10.00	4.00
M8 x 1mm **	13.00	5.30
M8 x 1.25mm	13.00	5.30
M10 x 1.25mm **	17.00	6.40
M10 x 1.5mm	17.00	6.40
M12 x 1.75mm	19.00	7.50

** DIN 961 Fine Thread, Fully Threaded

M6 x 1mm Thread Size

Lg.	Aluminum 2024T4 Part Number	Aluminum, Bl. Anodized Part Number
12	ZH721M6C12	ZH721M6C12-BK
16	ZH721M6C16	ZH721M6C16-BK
20	ZH721M6C20	ZH721M6C20-BK
25	ZH721M6C25	ZH721M6C25-BK
30	ZH721M6C30	ZH721M6C30-BK
40	ZH721M6C40	ZH721M6C40-BK

M8 x 1mm Thread Size

Lg.	Aluminum 2024T4 Part Number	Aluminum, Bl. Anodized Part Number
16	ZH721M8F16	ZH721M8F16-BK
20	ZH721M8F20	ZH721M8F20-BK
25	ZH721M8F25	ZH721M8F25-BK
30	ZH721M8F30	ZH721M8F30-BK
35	ZH721M8F35	ZH721M8F35-BK
40	ZH721M8F40	ZH721M8F40-BK
45	ZH721M8F45	ZH721M8F45-BK
50	ZH721M8F50	ZH721M8F50-BK
60	ZH721M8F60	ZH721M8F60-BK

M8 x 1.25mm Thread Size

Lg.	Aluminum 2024T4 Part Number	Aluminum, Bl. Anodized Part Number
16	ZH721M8C16	ZH721M8C16-BK
20	ZH721M8C20	ZH721M8C20-BK
25	ZH721M8C25	ZH721M8C25-BK
30	ZH721M8C30	ZH721M8C30-BK
35	ZH721M8C35	ZH721M8C35-BK
40	ZH721M8C40	ZH721M8C40-BK
45	ZH721M8C45	ZH721M8C45-BK
50	ZH721M8C50	ZH721M8C50-BK
60	ZH721M8C60	ZH721M8C60-BK

M10 x 1.25mm Thread Size

Lg.	Aluminum 2024T4 Part Number	Aluminum, Bl. Anodized Part Number
20	ZH721M10F20	ZH721M10F20-BK
25	ZH721M10F25	ZH721M10F25-BK
35	ZH721M10F35	ZH721M10F35-BK
40	ZH721M10F40	ZH721M10F40-BK
45	ZH721M10F45	ZH721M10F45-BK
50	ZH721M10F50	ZH721M10F50-BK
60	ZH721M10F60	ZH721M10F60-BK

M10 x 1.5mm Thread Size

Lg.	Aluminum 2024T4 Part Number	Aluminum, Bl. Anodized Part Number
20	ZH721M10C20	ZH721M10C20-BK
25	ZH721M10C25	ZH721M10C25-BK
30	ZH721M10C30	ZH721M10C30-BK
35	ZH721M10C35	ZH721M10C35-BK
40	ZH721M10C40	ZH721M10C40-BK
45	ZH721M10C45	ZH721M10C45-BK
50	ZH721M10C50	ZH721M10C50-BK
60	ZH721M10C60	ZH721M10C60-BK

M12 x 1.75mm Thread Size

Lg.	Aluminum 2024T4 Part Number	Aluminum, Bl. Anodized Part Number
25	ZH721M12C25	ZH721M12C25-BK
30	ZH721M12C30	ZH721M12C30-BK
35	ZH721M12C35	ZH721M12C35-BK
40	ZH721M12C40	ZH721M12C40-BK
50	ZH721M12C50	ZH721M12C50-BK
60	ZH721M12C60	ZH721M12C60-BK

Hex Head Cap Screws — Metric

Brass | Plain

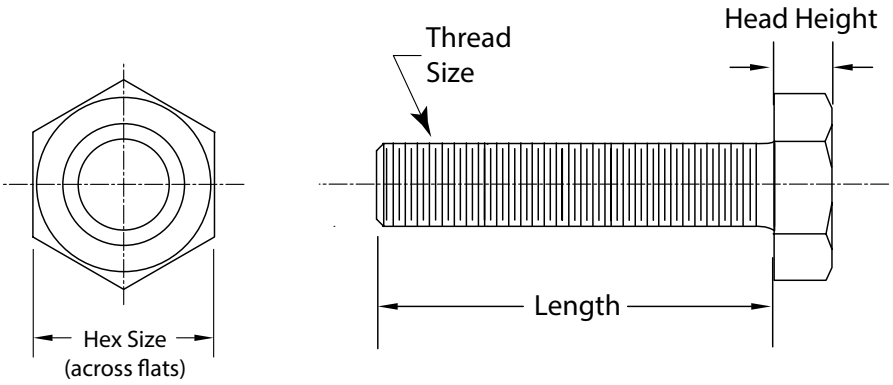

Dimensions Table — Metric

Thread Size	Head Diameter	Head Height
M4 x 0.7mm	7.00	2.80
M8 x 1mm **	13.00	5.30
M8 x 1.25mm	13.00	5.30
M10 x 1.25mm **	17.00	6.40
M10 x 1.5mm	17.00	6.40
M12 x 1.75mm	19.00	7.50

** DIN 961 Fine Thread, Fully Threaded

M4 x 0.7 Thread Size

Length	Full or Partial Threads	Brass Part Number
8	Full	ZH406M4CX8
10	Full	ZH406M4CX10
12	Full	ZH406M4CX12
16	Full	ZH406M4CX16
20	Full	ZH406M4CX20
25	Full	ZH406M4CX25
30	Full	ZH406M4CX30

M8 x 1 Thread Size

Length	Full or Partial Threads	Brass Part Number
16	Full	ZH406M8FX16
20	Full	ZH406M8FX20
25	Full	ZH406M8FX25
30	Full	ZH406M8FX30

M8 x 1.25 Thread Size

Length	Full or Partial Threads	Brass Part Number
45	Full	ZH406M8CX45
60	Full	ZH406M8CX60

M10 x 1.25 Thread Size

Length	Full or Partial Threads	Brass Part Number
20	Full	ZH406M10FX20
25	Full	ZH406M10FX25
35	Full	ZH406M10FX35
40	Full	ZH406M10FX40

M10 x 1.5 Thread Size

Length	Full or Partial Threads	Brass Part Number
45	Full	ZH406M10CX45
60	Full	ZH406M10CX60

M12 x 1.75 Thread Size

Length	Full or Partial Threads	Brass Part Number
30	Full	ZH406M12CX30
35	Full	ZH406M12CX35

Hex Head Cap Screws — Metric

17-4 PH SS | Plain

Product Information

Fully threaded hex head screws can be screwed all the way into a threaded or tapped hole. Partially threaded hex head screws have an unthreaded portion under the head that adds strength but prevents them from being screwed all the way into a threaded hole. 17-4 PH stainless steel maintains excellent corrosion resistance and strength at high temperatures. Screws have a Class 6g thread fit. Fully Threaded screws meet DIN 933 / ISO 4017. Partially Threaded meet DIN 931 / ISO 4014.

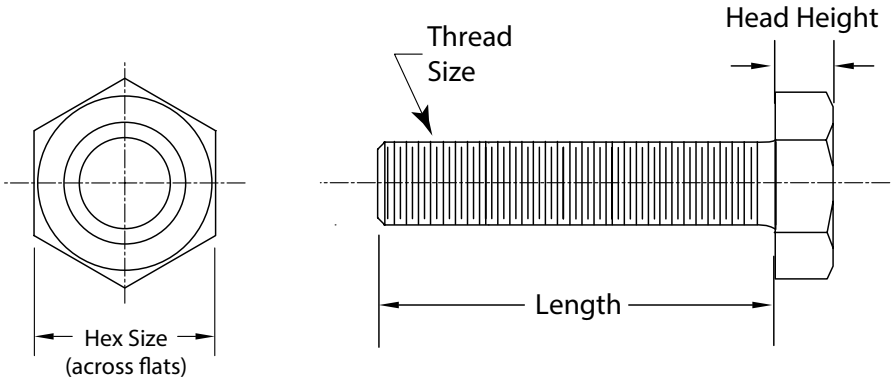

Dimensions Table — Metric

Thread Size	Hex Size	Head Height
M6 x 1mm	10.00	4.00
M8 x 1.25mm	13.00	5.30
M10 x 1.5mm	17.00	6.40
M12 x 1.75mm	19.00	7.50

M6 x 1mm Thread Size

Length	Full or Partial Threads	17-4 PH SS Part Number
10	Full	ZH744M6X10
12	Full	ZH744M6X12
14	Full	ZH744M6X14
16	Full	ZH744M6X16
20	Full	ZH744M6X20
25	Full	ZH744M6X25
30	Full	ZH744M6X30
35	Full	ZH744M6X35
40	24mm Min	ZH744M6X40

M8 x 1.25mm Thread Size

Length	Full or Partial Threads	17-4 PH SS Part Number
16	Full	ZH744M8X16
20	Full	ZH744M8X20
25	Full	ZH744M8X25
30	Full	ZH744M8X30
35	Full	ZH744M8X35
40	Full	ZH744M8X40
50	Full	ZH744M8X50

M10 x 1.5mm Thread Size

Length	Full or Partial Threads	17-4 PH SS Part Number
25	Full	ZH744M10X25
30	Full	ZH744M10X30
35	Full	ZH744M10X35
40	Full	ZH744M10X40
50	Full	ZH744M10X50

M12 x 1.75mm Thread Size

Length	Full or Partial Threads	17-4 PH SS Part Number
30	Full	ZH744M12X30
35	Full	ZH744M12X35
40	Full	ZH744M12X40
50	Full	ZH744M12X50

Flange Head Socket Cap Screw — Inch (Prairie Bolt™)

Product Information

When a bolt is used in an application that is primarily tension, both the head and nut should be heavy enough to handle tension loads. The heavy heads of a Prairie Bolt™ are designed with a flange which increases surface contact, improves holding power, and distributes loads over a larger area than standard hex head and socket head cap screws. The flange head's built-in washer prevents crushing thinner materials and is also a good choice for fastening aluminum, copper and composites. The head height includes the 1/16" flange thickness. Class 3A thread fit. Available in socket head or hex head styles.

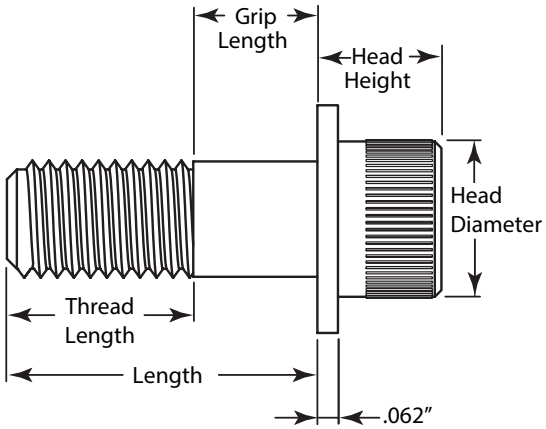

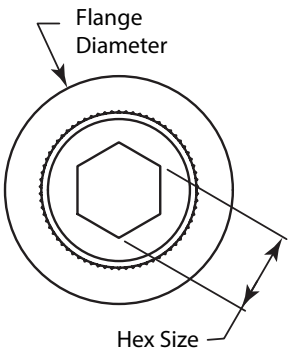

18-8 SS

316 SS

17-4 PH SS

Aluminum

Dimensions Table — Inch							
Thread Size	**Head Diameter**	**O'all Head Height**	**Flange Thickness**	**Flange Diameter**	**Thread Length**	**Unthreaded Shank Dia.**	**Drive Size**
8-32	17/64	15/64	1/16	3/8	3/16	.163 - .160	9/64
10-32	5/16	1/4	1/16	7/16	3/8	.189 - .186	5/32
1/4-20	3/8	5/16	1/16	9/16	7/16	.249 - .246	3/16
5/16-18	15/32	3/8	1/16	11/16	1/2	.312 - .309	1/4
3/8-16	9/16	7/16	1/16	13/16	5/8	.374 - .371	5/16
1/2-13	3/4	9/16	1/16	1-1/16	3/4	.499 - .495	3/8

AMPG ACCURATE MANUFACTURED PRODUCTS GROUP
ISO 9001:2015

Flange Head Socket Cap Screw — Inch

18-8 SS | Plain

Grip Lengths	8-32 Thread Part Number	10-32 Thread Part Number	1/4-20 Thread Part Number	5/16-18 Thread Part Number	3/8-16 Thread Part Number	1/2-13 Thread Part Number
1/8	ZPS60108C02	ZPS60110F02	ZPS60114C02	ZPS60151C02	ZPS60138C02	ZPS60112C02
1/4	ZPS60108C04	ZPS60110F04	ZPS60114C04	ZPS60151C04	ZPS60138C04	ZPS60112C04
3/8	ZPS60108C06	ZPS60110F06	ZPS60114C06	ZPS60151C06	ZPS60138C06	ZPS60112C06
1/2	ZPS60108C08	ZPS60110F08	ZPS60114C08	ZPS60151C08	ZPS60138C08	ZPS60112C08
5/8	ZPS60108C10	ZPS60110F10	ZPS60114C10	ZPS60151C10	ZPS60138C10	ZPS60112C10
3/4	ZPS60108C12	ZPS60110F12	ZPS60114C12	ZPS60151C12	ZPS60138C12	ZPS60112C12
7/8	ZPS60108C14	ZPS60110F14	ZPS60114C14	ZPS60151C14	ZPS60138C14	ZPS60112C14
1	ZPS60108C16	ZPS60110F16	ZPS60114C16	ZPS60151C16	ZPS60138C16	ZPS60112C16
1-1/8	ZPS60108C18	ZPS60110F18	ZPS60114C18	ZPS60151C18	ZPS60138C18	ZPS60112C18
1-1/4	ZPS60108C20	ZPS60110F20	ZPS60114C20	ZPS60151C20	ZPS60138C20	ZPS60112C20
1-3/8	ZPS60108C22	ZPS60110F22	ZPS60114C22	ZPS60151C22	ZPS60138C22	ZPS60112C22
1-1/2	ZPS60108C24	ZPS60110F24	ZPS60114C24	ZPS60151C24	ZPS60138C24	ZPS60112C24
1-5/8	ZPS60108C26	ZPS60110F26	ZPS60114C26	ZPS60151C26	ZPS60138C26	ZPS60112C26
1-3/4	ZPS60108C28	ZPS60110F28	ZPS60114C28	ZPS60151C28	ZPS60138C28	ZPS60112C28
1-7/8	ZPS60108C30	ZPS60110F30	ZPS60114C30	ZPS60151C30	ZPS60138C30	ZPS60112C30
2	ZPS60108C32	ZPS60110F32	ZPS60114C32	ZPS60151C32	ZPS60138C32	ZPS60112C32
2-1/8	ZPS60108C34	ZPS60110F34	ZPS60114C34	ZPS60151C34	ZPS60138C34	ZPS60112C34
2-1/4	ZPS60108C36	ZPS60110F36	ZPS60114C36	ZPS60151C36	ZPS60138C36	ZPS60112C36
2-3/8	ZPS60108C38	ZPS60110F38	ZPS60114C38	ZPS60151C38	ZPS60138C38	ZPS60112C38
2-1/2	ZPS60108C40	ZPS60110F40	ZPS60114C40	ZPS60151C40	ZPS60138C40	ZPS60112C40
2-5/8	ZPS60108C42	ZPS60110F42	ZPS60114C42	ZPS60151C42	ZPS60138C42	ZPS60112C42
2-3/4	ZPS60108C44	ZPS60110F44	ZPS60114C44	ZPS60151C44	ZPS60138C44	ZPS60112C44
2-7/8	ZPS60108C46	ZPS60110F46	ZPS60114C46	ZPS60151C46	ZPS60138C46	ZPS60112C46
3	ZPS60108C48	ZPS60110F48	ZPS60114C48	ZPS60151C48	ZPS60138C48	ZPS60112C48
3-1/8	ZPS60108C50	ZPS60110F50	ZPS60114C50	ZPS60151C50	ZPS60138C50	ZPS60112C50
3-1/4	ZPS60108C52	ZPS60110F52	ZPS60114C52	ZPS60151C52	ZPS60138C52	ZPS60112C52
3-3/8	ZPS60108C54	ZPS60110F54	ZPS60114C54	ZPS60151C54	ZPS60138C54	ZPS60112C54
3-1/2	ZPS60108C56	ZPS60110F56	ZPS60114C56	ZPS60151C56	ZPS60138C56	ZPS60112C56
3-5/8	ZPS60108C58	ZPS60110F58	ZPS60114C58	ZPS60151C58	ZPS60138C58	ZPS60112C58
3-3/4	ZPS60108C60	ZPS60110F60	ZPS60114C60	ZPS60151C60	ZPS60138C60	ZPS60112C60
3-7/8	ZPS60108C62	ZPS60110F62	ZPS60114C62	ZPS60151C62	ZPS60138C62	ZPS60112C62
4	ZPS60108C64	ZPS60110F64	ZPS60114C64	ZPS60151C64	ZPS60138C64	ZPS60112C64

Flange Head Socket Cap Screw — Inch

316 SS | Plain

Grip Lengths	8-32 Thread Part Number	10-32 Thread Part Number	1/4-20 Thread Part Number	5/16-18 Thread Part Number	3/8-16 Thread Part Number	1/2-13 Thread Part Number
1/8	ZPS60208C02	ZPS60210F02	ZPS60214C02	ZPS60251C02	ZPS60238C02	ZPS60212C02
1/4	ZPS60208C04	ZPS60210F04	ZPS60214C04	ZPS60251C04	ZPS60238C04	ZPS60212C04
3/8	ZPS60208C06	ZPS60210F06	ZPS60214C06	ZPS60251C06	ZPS60238C06	ZPS60212C06
1/2	ZPS60208C08	ZPS60210F08	ZPS60214C08	ZPS60251C08	ZPS60238C08	ZPS60212C08
5/8	ZPS60208C10	ZPS60210F10	ZPS60214C10	ZPS60251C10	ZPS60238C10	ZPS60212C10
3/4	ZPS60208C12	ZPS60210F12	ZPS60214C12	ZPS60251C12	ZPS60238C12	ZPS60212C12
7/8	ZPS60208C14	ZPS60210F14	ZPS60214C14	ZPS60251C14	ZPS60238C14	ZPS60212C14
1	ZPS60208C16	ZPS60210F16	ZPS60214C16	ZPS60251C16	ZPS60238C16	ZPS60212C16
1-1/8	ZPS60208C18	ZPS60210F18	ZPS60214C18	ZPS60251C18	ZPS60238C18	ZPS60212C18
1-1/4	ZPS60208C20	ZPS60210F20	ZPS60214C20	ZPS60251C20	ZPS60238C20	ZPS60212C20
1-3/8	ZPS60208C22	ZPS60210F22	ZPS60214C22	ZPS60251C22	ZPS60238C22	ZPS60212C22
1-1/2	ZPS60208C24	ZPS60210F24	ZPS60214C24	ZPS60251C24	ZPS60238C24	ZPS60212C24
1-5/8	ZPS60208C26	ZPS60210F26	ZPS60214C26	ZPS60251C26	ZPS60238C26	ZPS60212C26
1-3/4	ZPS60208C28	ZPS60210F28	ZPS60214C28	ZPS60251C28	ZPS60238C28	ZPS60212C28
1-7/8	ZPS60208C30	ZPS60210F30	ZPS60214C30	ZPS60251C30	ZPS60238C30	ZPS60212C30
2	ZPS60208C32	ZPS60210F32	ZPS60214C32	ZPS60251C32	ZPS60238C32	ZPS60212C32
2-1/8	ZPS60208C34	ZPS60210F34	ZPS60214C34	ZPS60251C34	ZPS60238C34	ZPS60212C34
2-1/4	ZPS60208C36	ZPS60210F36	ZPS60214C36	ZPS60251C36	ZPS60238C36	ZPS60212C36
2-3/8	ZPS60208C38	ZPS60210F38	ZPS60214C38	ZPS60251C38	ZPS60238C38	ZPS60212C38
2-1/2	ZPS60208C40	ZPS60210F40	ZPS60214C40	ZPS60251C40	ZPS60238C40	ZPS60212C40
2-5/8	ZPS60208C42	ZPS60210F42	ZPS60214C42	ZPS60251C42	ZPS60238C42	ZPS60212C42
2-3/4	ZPS60208C44	ZPS60210F44	ZPS60214C44	ZPS60251C44	ZPS60238C44	ZPS60212C44
2-7/8	ZPS60208C46	ZPS60210F46	ZPS60214C46	ZPS60251C46	ZPS60238C46	ZPS60212C46
3	ZPS60208C48	ZPS60210F48	ZPS60214C48	ZPS60251C48	ZPS60238C48	ZPS60212C48
3-1/8	ZPS60208C50	ZPS60210F50	ZPS60214C50	ZPS60251C50	ZPS60238C50	ZPS60212C50
3-1/4	ZPS60208C52	ZPS60210F52	ZPS60214C52	ZPS60251C52	ZPS60238C52	ZPS60212C52
3-3/8	ZPS60208C54	ZPS60210F54	ZPS60214C54	ZPS60251C54	ZPS60238C54	ZPS60212C54
3-1/2	ZPS60208C56	ZPS60210F56	ZPS60214C56	ZPS60251C56	ZPS60238C56	ZPS60212C56
3-5/8	ZPS60208C58	ZPS60210F58	ZPS60214C58	ZPS60251C58	ZPS60238C58	ZPS60212C58
3-3/4	ZPS60208C60	ZPS60210F60	ZPS60214C60	ZPS60251C60	ZPS60238C60	ZPS60212C60
3-7/8	ZPS60208C62	ZPS60210F62	ZPS60214C62	ZPS60251C62	ZPS60238C62	ZPS60212C62
4	ZPS60208C64	ZPS60210F64	ZPS60214C64	ZPS60251C64	ZPS60238C64	ZPS60212C64

Flange Head Socket Cap Screw — Inch

17-4 PH SS | Plain

Grip Lengths	8-32 Thread Part Number	10-32 Thread Part Number	1/4-20 Thread Part Number	5/16-18 Thread Part Number	3/8-16 Thread Part Number	1/2-13 Thread Part Number
1/8	ZPS44008C02	ZPS44010F02	ZPS44014C02	ZPS44051C02	ZPS44038C02	ZPS44012C02
1/4	ZPS44008C04	ZPS44010F04	ZPS44014C04	ZPS44051C04	ZPS44038C04	ZPS44012C04
3/8	ZPS44008C06	ZPS44010F06	ZPS44014C06	ZPS44051C06	ZPS44038C06	ZPS44012C06
1/2	ZPS44008C08	ZPS44010F08	ZPS44014C08	ZPS44051C08	ZPS44038C08	ZPS44012C08
5/8	ZPS44008C10	ZPS44010F10	ZPS44014C10	ZPS44051C10	ZPS44038C10	ZPS44012C10
3/4	ZPS44008C12	ZPS44010F12	ZPS44014C12	ZPS44051C12	ZPS44038C12	ZPS44012C12
7/8	ZPS44008C14	ZPS44010F14	ZPS44014C14	ZPS44051C14	ZPS44038C14	ZPS44012C14
1	ZPS44008C16	ZPS44010F16	ZPS44014C16	ZPS44051C16	ZPS44038C16	ZPS44012C16
1-1/8	ZPS44008C18	ZPS44010F18	ZPS44014C18	ZPS44051C18	ZPS44038C18	ZPS44012C18
1-1/4	ZPS44008C20	ZPS44010F20	ZPS44014C20	ZPS44051C20	ZPS44038C20	ZPS44012C20
1-3/8	ZPS44008C22	ZPS44010F22	ZPS44014C22	ZPS44051C22	ZPS44038C22	ZPS44012C22
1-1/2	ZPS44008C24	ZPS44010F24	ZPS44014C24	ZPS44051C24	ZPS44038C24	ZPS44012C24
1-5/8	ZPS44008C26	ZPS44010F26	ZPS44014C26	ZPS44051C26	ZPS44038C26	ZPS44012C26
1-3/4	ZPS44008C28	ZPS44010F28	ZPS44014C28	ZPS44051C28	ZPS44038C28	ZPS44012C28
1-7/8	ZPS44008C30	ZPS44010F30	ZPS44014C30	ZPS44051C30	ZPS44038C30	ZPS44012C30
2	ZPS44008C32	ZPS44010F32	ZPS44014C32	ZPS44051C32	ZPS44038C32	ZPS44012C32
2-1/8	ZPS44008C34	ZPS44010F34	ZPS44014C34	ZPS44051C34	ZPS44038C34	ZPS44012C34
2-1/4	ZPS44008C36	ZPS44010F36	ZPS44014C36	ZPS44051C36	ZPS44038C36	ZPS44012C36
2-3/8	ZPS44008C38	ZPS44010F38	ZPS44014C38	ZPS44051C38	ZPS44038C38	ZPS44012C38
2-1/2	ZPS44008C40	ZPS44010F40	ZPS44014C40	ZPS44051C40	ZPS44038C40	ZPS44012C40
2-5/8	ZPS44008C42	ZPS44010F42	ZPS44014C42	ZPS44051C42	ZPS44038C42	ZPS44012C42
2-3/4	ZPS44008C44	ZPS44010F44	ZPS44014C44	ZPS44051C44	ZPS44038C44	ZPS44012C44
2-7/8	ZPS44008C46	ZPS44010F46	ZPS44014C46	ZPS44051C46	ZPS44038C46	ZPS44012C46
3	ZPS44008C48	ZPS44010F48	ZPS44014C48	ZPS44051C48	ZPS44038C48	ZPS44012C48
3-1/8	ZPS44008C50	ZPS44010F50	ZPS44014C50	ZPS44051C50	ZPS44038C50	ZPS44012C50
3-1/4	ZPS44008C52	ZPS44010F52	ZPS44014C52	ZPS44051C52	ZPS44038C52	ZPS44012C52
3-3/8	ZPS44008C54	ZPS44010F54	ZPS44014C54	ZPS44051C54	ZPS44038C54	ZPS44012C54
3-1/2	ZPS44008C56	ZPS44010F56	ZPS44014C56	ZPS44051C56	ZPS44038C56	ZPS44012C56
3-5/8	ZPS44008C58	ZPS44010F58	ZPS44014C58	ZPS44051C58	ZPS44038C58	ZPS44012C58
3-3/4	ZPS44008C60	ZPS44010F60	ZPS44014C60	ZPS44051C60	ZPS44038C60	ZPS44012C60
3-7/8	ZPS44008C62	ZPS44010F62	ZPS44014C62	ZPS44051C62	ZPS44038C62	ZPS44012C62
4	ZPS44008C64	ZPS44010F64	ZPS44014C64	ZPS44051C64	ZPS44038C64	ZPS44012C64

Flange Head Socket Cap Screw — Inch

Aluminum | Plain

Grip Lengths	8-32 Thread Part Number	10-32 Thread Part Number	1/4-20 Thread Part Number	5/16-18 Thread Part Number	3/8-16 Thread Part Number	1/2-13 Thread Part Number
1/8	ZPS72008C02	ZPS72010F02	ZPS72014C02	ZPS72051C02	ZPS72038C02	ZPS72012C02
1/4	ZPS72008C04	ZPS72010F04	ZPS72014C04	ZPS72051C04	ZPS72038C04	ZPS72012C04
3/8	ZPS72008C06	ZPS72010F06	ZPS72014C06	ZPS72051C06	ZPS72038C06	ZPS72012C06
1/2	ZPS72008C08	ZPS72010F08	ZPS72014C08	ZPS72051C08	ZPS72038C08	ZPS72012C08
5/8	ZPS72008C10	ZPS72010F10	ZPS72014C10	ZPS72051C10	ZPS72038C10	ZPS72012C10
3/4	ZPS72008C12	ZPS72010F12	ZPS72014C12	ZPS72051C12	ZPS72038C12	ZPS72012C12
7/8	ZPS72008C14	ZPS72010F14	ZPS72014C14	ZPS72051C14	ZPS72038C14	ZPS72012C14
1	ZPS72008C16	ZPS72010F16	ZPS72014C16	ZPS72051C16	ZPS72038C16	ZPS72012C16
1-1/8	ZPS72008C18	ZPS72010F18	ZPS72014C18	ZPS72051C18	ZPS72038C18	ZPS72012C18
1-1/4	ZPS72008C20	ZPS72010F20	ZPS72014C20	ZPS72051C20	ZPS72038C20	ZPS72012C20
1-3/8	ZPS72008C22	ZPS72010F22	ZPS72014C22	ZPS72051C22	ZPS72038C22	ZPS72012C22
1-1/2	ZPS72008C24	ZPS72010F24	ZPS72014C24	ZPS72051C24	ZPS72038C24	ZPS72012C24
1-5/8	ZPS72008C26	ZPS72010F26	ZPS72014C26	ZPS72051C26	ZPS72038C26	ZPS72012C26
1-3/4	ZPS72008C28	ZPS72010F28	ZPS72014C28	ZPS72051C28	ZPS72038C28	ZPS72012C28
1-7/8	ZPS72008C30	ZPS72010F30	ZPS72014C30	ZPS72051C30	ZPS72038C30	ZPS72012C30
2	ZPS72008C32	ZPS72010F32	ZPS72014C32	ZPS72051C32	ZPS72038C32	ZPS72012C32
2-1/8	ZPS72008C34	ZPS72010F34	ZPS72014C34	ZPS72051C34	ZPS72038C34	ZPS72012C34
2-1/4	ZPS72008C36	ZPS72010F36	ZPS72014C36	ZPS72051C36	ZPS72038C36	ZPS72012C36
2-3/8	ZPS72008C38	ZPS72010F38	ZPS72014C38	ZPS72051C38	ZPS72038C38	ZPS72012C38
2-1/2	ZPS72008C40	ZPS72010F40	ZPS72014C40	ZPS72051C40	ZPS72038C40	ZPS72012C40
2-5/8	ZPS72008C42	ZPS72010F42	ZPS72014C42	ZPS72051C42	ZPS72038C42	ZPS72012C42
2-3/4	ZPS72008C44	ZPS72010F44	ZPS72014C44	ZPS72051C44	ZPS72038C44	ZPS72012C44
2-7/8	ZPS72008C46	ZPS72010F46	ZPS72014C46	ZPS72051C46	ZPS72038C46	ZPS72012C46
3	ZPS72008C48	ZPS72010F48	ZPS72014C48	ZPS72051C48	ZPS72038C48	ZPS72012C48
3-1/8	ZPS72008C50	ZPS72010F50	ZPS72014C50	ZPS72051C50	ZPS72038C50	ZPS72012C50
3-1/4	ZPS72008C52	ZPS72010F52	ZPS72014C52	ZPS72051C52	ZPS72038C52	ZPS72012C52
3-3/8	ZPS72008C54	ZPS72010F54	ZPS72014C54	ZPS72051C54	ZPS72038C54	ZPS72012C54
3-1/2	ZPS72008C56	ZPS72010F56	ZPS72014C56	ZPS72051C56	ZPS72038C56	ZPS72012C56
3-5/8	ZPS72008C58	ZPS72010F58	ZPS72014C58	ZPS72051C58	ZPS72038C58	ZPS72012C58
3-3/4	ZPS72008C60	ZPS72010F60	ZPS72014C60	ZPS72051C60	ZPS72038C60	ZPS72012C60
3-7/8	ZPS72008C62	ZPS72010F62	ZPS72014C62	ZPS72051C62	ZPS72038C62	ZPS72012C62
4	ZPS72008C64	ZPS72010F64	ZPS72014C64	ZPS72051C64	ZPS72038C64	ZPS72012C64

Flange Head Socket Cap Screws, Fully Threaded — Inch

4140 Alloy Steel | Black Oxide

Product Information

Like a bult-in washer, the flange head distributes holding pressure, so screws are less likely to come loose. This built-in washer prevents crushing thinner materials or marring harder surfaces. All screws are made from alloy steel and have a black finish. They are fully threaded and have a Class 3A thread fit. Flange Thickness is 1/16". Head height is measured from the bottom of the angle to the top of the head. Screw length is measured from under the flange. The head height includes the 1/16" flange thickness. Class 3A thread fit and are fully threaded. 4140 Alloy Steel Flange Head Socket Cap Screws meets internal specification AMPG 2013FSC.04.

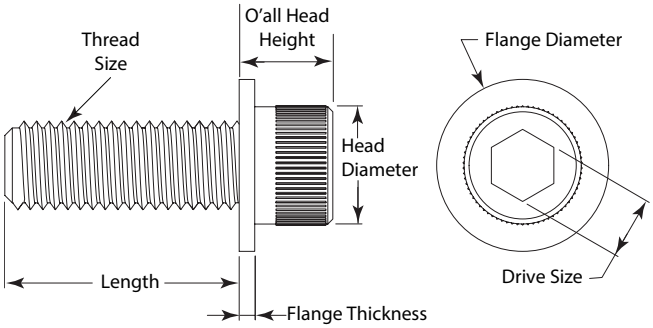

Dimensions Table — Inch

Thread Size	Head Diameter	Flange Thickness	O'all Head Height	Flange Diameter	Drive Size
4-40	.183	1/16	.172	.250	3/32
6-32	.226	1/16	.203	5/16	7/64
8-32	.270	1/16	.234	3/8	9/64
10-32	.312	1/16	.250	7/16	5/32
1/4-20	.375	1/16	.313	9/16	3/16
3/8-16	.562	1/16	.813	13/16	5/16
1/2-13	.750	1/16	.563	1-1/16	3/8

4-40 Thread Size

Length	4140 Alloy Steel Part Number
1/4	ZPS41404C04
3/8	ZPS41404C06
1/2	ZPS41404C08

6-32 Thread Size

Length	4140 Alloy Steel Part Number
1/4	ZPS41406C04
3/8	ZPS41406C06
1/2	ZPS41406C08

8-32 Thread Size

Length	4140 Alloy Steel Part Number
3/8	ZPS41408C06
1/2	ZPS41408C08
5/8	ZPS41408C10
3/4	ZPS41408C12
1	ZPS41408C16

10-32 Thread Size

Length	4140 Alloy Steel Part Number
3/8	ZPS41410F06
1/2	ZPS41410F08
3/4	ZPS41410F12
1	ZPS41410F16

1/4-20 Thread Size

Length	4140 Alloy Steel Part Number
3/8	ZPS41414C06
1/2	ZPS41414C08
3/4	ZPS41414C12
1	ZPS41414C16
1-1/4	ZPS41414C20
1-1/2	ZPS41414C24

1/2-13 Thread Size

Length	4140 Alloy Steel Part Number
3/4	ZPS41412C12
1	ZPS41412C16
1-1/4	ZPS41412C20
1-1/2	ZPS41412C24

3/8-16 Thread Size

Length	4140 Alloy Steel Part Number
3/4	ZPS41438C12
1	ZPS41438C16
1-1/4	ZPS41438C20
1-1/2	ZPS41438C24

Flange Hex Head Cap Screw — Inch (Prairie Bolt™)

Product Information

When a bolt is used in an application that is primarily tension, both the head and nut should be heavy enough to handle tension loads. The heavy heads of a Prairie Bolt™ are designed with a flange which increases surface contact, improves holding power, and distributes loads over a larger area than standard hex head and socket head cap screws. The flange head's built-in washer prevents crushing thinner materials and is also a good choice for fastening aluminum, copper and composites. The head height includes the 1/16" flange thickness. Class 2A thread fit. Available in socket head or hex head styles.

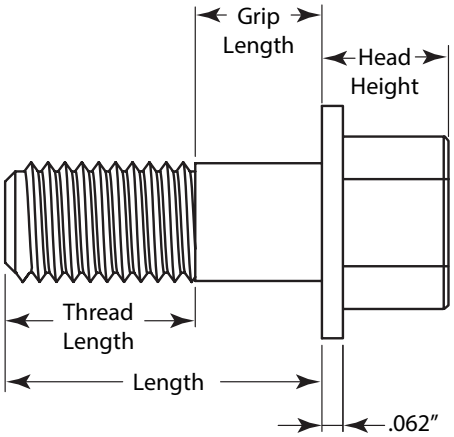

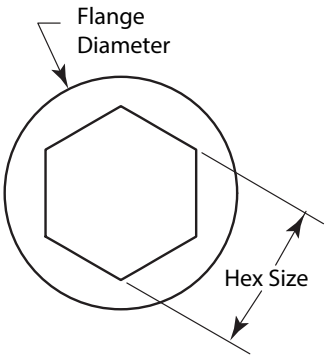

18-8 SS

316 SS

17-4 PH SS

Aluminum

Dimensions Table — Inch

Thread Size	Hex Size	O'all Head Height	Flange Diameter	Flange Thickness	Thread Length	Unthreaded Shank Dia.
8-32	1/4	7/32	15/32	1/16	3/16	.163 - .160
10-32	5/16	15/64	1/2	1/16	3/8	.189 - .186
1/4-20	3/8	9/32	9/16	1/16	7/16	.249 - .246
5/16-18	1/2	21/64	11/16	1/16	1/2	.312 - .309
3/8-16	9/16	25/64	13/16	1/16	5/8	.374 - .371
1/2-13	3/4	33/64	1-5/64	1/16	3/4	.499 - .495

AMPG ACCURATE MANUFACTURED PRODUCTS GROUP
ISO 9001:2015

Flange Hex Head Cap Screw — Inch

18-8 SS | Plain

Grip Lengths	8-32 Thread Part Number	10-32 Thread Part Number	1/4-20 Thread Part Number	5/16-18 Thread Part Number	3/8-16 Thread Part Number	1/2-13 Thread Part Number
1/8	ZPH60108C02	ZPH60110F-02	ZPH60114C02	ZPH60151C02	ZPH60138C02	ZPH60112C02
1/4	ZPH60108C04	ZPH60110F-04	ZPH60114C04	ZPH60151C04	ZPH60138C04	ZPH60112C04
3/8	ZPH60108C06	ZPH60110F-06	ZPH60114C06	ZPH60151C06	ZPH60138C06	ZPH60112C06
1/2	ZPH60108C08	ZPH60110F-08	ZPH60114C08	ZPH60151C08	ZPH60138C08	ZPH60112C08
5/8	ZPH60108C10	ZPH60110F-10	ZPH60114C10	ZPH60151C10	ZPH60138C10	ZPH60112C10
3/4	ZPH60108C12	ZPH60110F-12	ZPH60114C12	ZPH60151C12	ZPH60138C12	ZPH60112C12
7/8	ZPH60108C14	ZPH60110F-14	ZPH60114C14	ZPH60151C14	ZPH60138C14	ZPH60112C14
1	ZPH60108C16	ZPH60110F-16	ZPH60114C16	ZPH60151C16	ZPH60138C16	ZPH60112C16
1-1/8	ZPH60108C18	ZPH60110F-18	ZPH60114C18	ZPH60151C18	ZPH60138C18	ZPH60112C18
1-1/4	ZPH60108C20	ZPH60110F-20	ZPH60114C20	ZPH60151C20	ZPH60138C20	ZPH60112C20
1-3/8	ZPH60108C22	ZPH60110F-22	ZPH60114C22	ZPH60151C22	ZPH60138C22	ZPH60112C22
1-1/2	ZPH60108C24	ZPH60110F-24	ZPH60114C24	ZPH60151C24	ZPH60138C24	ZPH60112C24
1-5/8	ZPH60108C26	ZPH60110F-26	ZPH60114C26	ZPH60151C26	ZPH60138C26	ZPH60112C26
1-3/4	ZPH60108C28	ZPH60110F-28	ZPH60114C28	ZPH60151C28	ZPH60138C28	ZPH60112C28
1-7/8	ZPH60108C30	ZPH60110F-30	ZPH60114C30	ZPH60151C30	ZPH60138C30	ZPH60112C30
2	ZPH60108C32	ZPH60110F-32	ZPH60114C32	ZPH60151C32	ZPH60138C32	ZPH60112C32
2-1/8	ZPH60108C34	ZPH60110F-34	ZPH60114C34	ZPH60151C34	ZPH60138C34	ZPH60112C34
2-1/4	ZPH60108C36	ZPH60110F-36	ZPH60114C36	ZPH60151C36	ZPH60138C36	ZPH60112C36
2-3/8	ZPH60108C38	ZPH60110F-38	ZPH60114C38	ZPH60151C38	ZPH60138C38	ZPH60112C38
2-1/2	ZPH60108C40	ZPH60110F-40	ZPH60114C40	ZPH60151C40	ZPH60138C40	ZPH60112C40
2-5/8	ZPH60108C42	ZPH60110F-42	ZPH60114C42	ZPH60151C42	ZPH60138C42	ZPH60112C42
2-3/4	ZPH60108C44	ZPH60110F-44	ZPH60114C44	ZPH60151C44	ZPH60138C44	ZPH60112C44
2-7/8	ZPH60108C46	ZPH60110F-46	ZPH60114C46	ZPH60151C46	ZPH60138C46	ZPH60112C46
3	ZPH60108C48	ZPH60110F-48	ZPH60114C48	ZPH60151C48	ZPH60138C48	ZPH60112C48
3-1/8	ZPH60108C50	ZPH60110F-50	ZPH60114C50	ZPH60151C50	ZPH60138C50	ZPH60112C50
3-1/4	ZPH60108C52	ZPH60110F-52	ZPH60114C52	ZPH60151C52	ZPH60138C52	ZPH60112C52
3-3/8	ZPH60108C54	ZPH60110F-54	ZPH60114C54	ZPH60151C54	ZPH60138C54	ZPH60112C54
3-1/2	ZPH60108C56	ZPH60110F-56	ZPH60114C56	ZPH60151C56	ZPH60138C56	ZPH60112C56
3-5/8	ZPH60108C58	ZPH60110F-58	ZPH60114C58	ZPH60151C58	ZPH60138C58	ZPH60112C58
3-3/4	ZPH60108C60	ZPH60110F-60	ZPH60114C60	ZPH60151C60	ZPH60138C60	ZPH60112C60
3-7/8	ZPH60108C62	ZPH60110F-62	ZPH60114C62	ZPH60151C62	ZPH60138C62	ZPH60112C62
4	ZPH60108C64	ZPH60110F-64	ZPH60114C64	ZPH60151C64	ZPH60138C64	ZPH60112C64

Flange Hex Head Cap Screw — Inch

316 SS | Plain

Grip Lengths	8-32 Thread Part Number	10-32 Thread Part Number	1/4-20 Thread Part Number	5/16-18 Thread Part Number	3/8-16 Thread Part Number	1/2-13 Thread Part Number
1/8	ZPH60208C02	ZPH60210F02	ZPH60214C02	ZPH60251C02	ZPH60238C02	ZPH60212C02
1/4	ZPH60208C04	ZPH60210F04	ZPH60214C04	ZPH60251C04	ZPH60238C04	ZPH60212C04
3/8	ZPH60208C06	ZPH60210F06	ZPH60214C06	ZPH60251C06	ZPH60238C06	ZPH60212C06
1/2	ZPH60208C08	ZPH60210F08	ZPH60214C08	ZPH60251C08	ZPH60238C08	ZPH60212C08
5/8	ZPH60208C10	ZPH60210F10	ZPH60214C10	ZPH60251C10	ZPH60238C10	ZPH60212C10
3/4	ZPH60208C12	ZPH60210F12	ZPH60214C12	ZPH60251C12	ZPH60238C12	ZPH60212C12
7/8	ZPH60208C14	ZPH60210F14	ZPH60214C14	ZPH60251C14	ZPH60238C14	ZPH60212C14
1	ZPH60208C16	ZPH60210F16	ZPH60214C16	ZPH60251C16	ZPH60238C16	ZPH60212C16
1-1/8	ZPH60208C18	ZPH60210F18	ZPH60214C18	ZPH60251C18	ZPH60238C18	ZPH60212C18
1-1/4	ZPH60208C20	ZPH60210F20	ZPH60214C20	ZPH60251C20	ZPH60238C20	ZPH60212C20
1-3/8	ZPH60208C22	ZPH60210F22	ZPH60214C22	ZPH60251C22	ZPH60238C22	ZPH60212C22
1-1/2	ZPH60208C24	ZPH60210F24	ZPH60214C24	ZPH60251C24	ZPH60238C24	ZPH60212C24
1-5/8	ZPH60208C26	ZPH60210F26	ZPH60214C26	ZPH60251C26	ZPH60238C26	ZPH60212C26
1-3/4	ZPH60208C28	ZPH60210F28	ZPH60214C28	ZPH60251C28	ZPH60238C28	ZPH60212C28
1-7/8	ZPH60208C30	ZPH60210F30	ZPH60214C30	ZPH60251C30	ZPH60238C30	ZPH60212C30
2	ZPH60208C32	ZPH60210F32	ZPH60214C32	ZPH60251C32	ZPH60238C32	ZPH60212C32
2-1/8	ZPH60208C34	ZPH60210F34	ZPH60214C34	ZPH60251C34	ZPH60238C34	ZPH60212C34
2-1/4	ZPH60208C36	ZPH60210F36	ZPH60214C36	ZPH60251C36	ZPH60238C36	ZPH60212C36
2-3/8	ZPH60208C38	ZPH60210F38	ZPH60214C38	ZPH60251C38	ZPH60238C38	ZPH60212C38
2-1/2	ZPH60208C40	ZPH60210F40	ZPH60214C40	ZPH60251C40	ZPH60238C40	ZPH60212C40
2-5/8	ZPH60208C42	ZPH60210F42	ZPH60214C42	ZPH60251C42	ZPH60238C42	ZPH60212C42
2-3/4	ZPH60208C44	ZPH60210F44	ZPH60214C44	ZPH60251C44	ZPH60238C44	ZPH60212C44
2-7/8	ZPH60208C46	ZPH60210F46	ZPH60214C46	ZPH60251C46	ZPH60238C46	ZPH60212C46
3	ZPH60208C48	ZPH60210F48	ZPH60214C48	ZPH60251C48	ZPH60238C48	ZPH60212C48
3-1/8	ZPH60208C50	ZPH60210F50	ZPH60214C50	ZPH60251C50	ZPH60238C50	ZPH60212C50
3-1/4	ZPH60208C52	ZPH60210F52	ZPH60214C52	ZPH60251C52	ZPH60238C52	ZPH60212C52
3-3/8	ZPH60208C54	ZPH60210F54	ZPH60214C54	ZPH60251C54	ZPH60238C54	ZPH60212C54
3-1/2	ZPH60208C56	ZPH60210F56	ZPH60214C56	ZPH60251C56	ZPH60238C56	ZPH60212C56
3-5/8	ZPH60208C58	ZPH60210F58	ZPH60214C58	ZPH60251C58	ZPH60238C58	ZPH60212C58
3-3/4	ZPH60208C60	ZPH60210F60	ZPH60214C60	ZPH60251C60	ZPH60238C60	ZPH60212C60
3-7/8	ZPH60208C62	ZPH60210F62	ZPH60214C62	ZPH60251C62	ZPH60238C62	ZPH60212C62
4	ZPH60208C64	ZPH60210F64	ZPH60214C64	ZPH60251C64	ZPH60238C64	ZPH60212C64

Flange Hex Head Cap Screw — Inch

17-4 PH SS | Plain

Grip Lengths	8-32 Thread Part Number	10-32 Thread Part Number	1/4-20 Thread Part Number	5/16-18 Thread Part Number	3/8-16 Thread Part Number	1/2-13 Thread Part Number
1/8	ZPH44008C02	ZPH44010F02	ZPH44014C02	ZPH44051C02	ZPH44038C02	ZPH44012C02
1/4	ZPH44008C04	ZPH44010F04	ZPH44014C04	ZPH44051C04	ZPH44038C04	ZPH44012C04
3/8	ZPH44008C06	ZPH44010F06	ZPH44014C06	ZPH44051C06	ZPH44038C06	ZPH44012C06
1/2	ZPH44008C08	ZPH44010F08	ZPH44014C08	ZPH44051C08	ZPH44038C08	ZPH44012C08
5/8	ZPH44008C10	ZPH44010F10	ZPH44014C10	ZPH44051C10	ZPH44038C10	ZPH44012C10
3/4	ZPH44008C12	ZPH44010F12	ZPH44014C12	ZPH44051C12	ZPH44038C12	ZPH44012C12
7/8	ZPH44008C14	ZPH44010F14	ZPH44014C14	ZPH44051C14	ZPH44038C14	ZPH44012C14
1	ZPH44008C16	ZPH44010F16	ZPH44014C16	ZPH44051C16	ZPH44038C16	ZPH44012C16
1-1/8	ZPH44008C18	ZPH44010F18	ZPH44014C18	ZPH44051C18	ZPH44038C18	ZPH44012C18
1-1/4	ZPH44008C20	ZPH44010F20	ZPH44014C20	ZPH44051C20	ZPH44038C20	ZPH44012C20
1-3/8	ZPH44008C22	ZPH44010F22	ZPH44014C22	ZPH44051C22	ZPH44038C22	ZPH44012C22
1-1/2	ZPH44008C24	ZPH44010F24	ZPH44014C24	ZPH44051C24	ZPH44038C24	ZPH44012C24
1-5/8	ZPH44008C26	ZPH44010F26	ZPH44014C26	ZPH44051C26	ZPH44038C26	ZPH44012C26
1-3/4	ZPH44008C28	ZPH44010F28	ZPH44014C28	ZPH44051C28	ZPH44038C28	ZPH44012C28
1-7/8	ZPH44008C30	ZPH44010F30	ZPH44014C30	ZPH44051C30	ZPH44038C30	ZPH44012C30
2	ZPH44008C32	ZPH44010F32	ZPH44014C32	ZPH44051C32	ZPH44038C32	ZPH44012C32
2-1/8	ZPH44008C34	ZPH44010F34	ZPH44014C34	ZPH44051C34	ZPH44038C34	ZPH44012C34
2-1/4	ZPH44008C36	ZPH44010F36	ZPH44014C36	ZPH44051C36	ZPH44038C36	ZPH44012C36
2-3/8	ZPH44008C38	ZPH44010F38	ZPH44014C38	ZPH44051C38	ZPH44038C38	ZPH44012C38
2-1/2	ZPH44008C40	ZPH44010F40	ZPH44014C40	ZPH44051C40	ZPH44038C40	ZPH44012C40
2-5/8	ZPH44008C42	ZPH44010F42	ZPH44014C42	ZPH44051C42	ZPH44038C42	ZPH44012C42
2-3/4	ZPH44008C44	ZPH44010F44	ZPH44014C44	ZPH44051C44	ZPH44038C44	ZPH44012C44
2-7/8	ZPH44008C46	ZPH44010F46	ZPH44014C46	ZPH44051C46	ZPH44038C46	ZPH44012C46
3	ZPH44008C48	ZPH44010F48	ZPH44014C48	ZPH44051C48	ZPH44038C48	ZPH44012C48
3-1/8	ZPH44008C50	ZPH44010F50	ZPH44014C50	ZPH44051C50	ZPH44038C50	ZPH44012C50
3-1/4	ZPH44008C52	ZPH44010F52	ZPH44014C52	ZPH44051C52	ZPH44038C52	ZPH44012C52
3-3/8	ZPH44008C54	ZPH44010F54	ZPH44014C54	ZPH44051C54	ZPH44038C54	ZPH44012C54
3-1/2	ZPH44008C56	ZPH44010F56	ZPH44014C56	ZPH44051C56	ZPH44038C56	ZPH44012C56
3-5/8	ZPH44008C58	ZPH44010F58	ZPH44014C58	ZPH44051C58	ZPH44038C58	ZPH44012C58
3-3/4	ZPH44008C60	ZPH44010F60	ZPH44014C60	ZPH44051C60	ZPH44038C60	ZPH44012C60
3-7/8	ZPH44008C62	ZPH44010F62	ZPH44014C62	ZPH44051C62	ZPH44038C62	ZPH44012C62
4	ZPH44008C64	ZPH44010F64	ZPH44014C64	ZPH44051C64	ZPH44038C64	ZPH44012C64

Flange Hex Head Cap Screw — Inch

Aluminum | Plain

Grip Lengths	8-32 Thread Part Number	10-32 Thread Part Number	1/4-20 Thread Part Number	5/16-18 Thread Part Number	3/8-16 Thread Part Number	1/2-13 Thread Part Number
1/8	ZPH72008C02	ZPH72010F02	ZPH72014C02	ZPH72051C02	ZPH72038C02	ZPH72012C02
1/4	ZPH72008C04	ZPH72010F04	ZPH72014C04	ZPH72051C04	ZPH72038C04	ZPH72012C04
3/8	ZPH72008C06	ZPH72010F06	ZPH72014C06	ZPH72051C06	ZPH72038C06	ZPH72012C06
1/2	ZPH72008C08	ZPH72010F08	ZPH72014C08	ZPH72051C08	ZPH72038C08	ZPH72012C08
5/8	ZPH72008C10	ZPH72010F10	ZPH72014C10	ZPH72051C10	ZPH72038C10	ZPH72012C10
3/4	ZPH72008C12	ZPH72010F12	ZPH72014C12	ZPH72051C12	ZPH72038C12	ZPH72012C12
7/8	ZPH72008C14	ZPH72010F14	ZPH72014C14	ZPH72051C14	ZPH72038C14	ZPH72012C14
1	ZPH72008C16	ZPH72010F16	ZPH72014C16	ZPH72051C16	ZPH72038C16	ZPH72012C16
1-1/8	ZPH72008C18	ZPH72010F18	ZPH72014C18	ZPH72051C18	ZPH72038C18	ZPH72012C18
1-1/4	ZPH72008C20	ZPH72010F20	ZPH72014C20	ZPH72051C20	ZPH72038C20	ZPH72012C20
1-3/8	ZPH72008C22	ZPH72010F22	ZPH72014C22	ZPH72051C22	ZPH72038C22	ZPH72012C22
1-1/2	ZPH72008C24	ZPH72010F24	ZPH72014C24	ZPH72051C24	ZPH72038C24	ZPH72012C24
1-5/8	ZPH72008C26	ZPH72010F26	ZPH72014C26	ZPH72051C26	ZPH72038C26	ZPH72012C26
1-3/4	ZPH72008C28	ZPH72010F28	ZPH72014C28	ZPH72051C28	ZPH72038C28	ZPH72012C28
1-7/8	ZPH72008C30	ZPH72010F30	ZPH72014C30	ZPH72051C30	ZPH72038C30	ZPH72012C30
2	ZPH72008C32	ZPH72010F32	ZPH72014C32	ZPH72051C32	ZPH72038C32	ZPH72012C32
2-1/8	ZPH72008C34	ZPH72010F34	ZPH72014C34	ZPH72051C34	ZPH72038C34	ZPH72012C34
2-1/4	ZPH72008C36	ZPH72010F36	ZPH72014C36	ZPH72051C36	ZPH72038C36	ZPH72012C36
2-3/8	ZPH72008C38	ZPH72010F38	ZPH72014C38	ZPH72051C38	ZPH72038C38	ZPH72012C38
2-1/2	ZPH72008C40	ZPH72010F40	ZPH72014C40	ZPH72051C40	ZPH72038C40	ZPH72012C40
2-5/8	ZPH72008C42	ZPH72010F42	ZPH72014C42	ZPH72051C42	ZPH72038C42	ZPH72012C42
2-3/4	ZPH72008C44	ZPH72010F44	ZPH72014C44	ZPH72051C44	ZPH72038C44	ZPH72012C44
2-7/8	ZPH72008C46	ZPH72010F46	ZPH72014C46	ZPH72051C46	ZPH72038C46	ZPH72012C46
3	ZPH72008C48	ZPH72010F48	ZPH72014C48	ZPH72051C48	ZPH72038C48	ZPH72012C48
3-1/8	ZPH72008C50	ZPH72010F50	ZPH72014C50	ZPH72051C50	ZPH72038C50	ZPH72012C50
3-1/4	ZPH72008C52	ZPH72010F52	ZPH72014C52	ZPH72051C52	ZPH72038C52	ZPH72012C52
3-3/8	ZPH72008C54	ZPH72010F54	ZPH72014C54	ZPH72051C54	ZPH72038C54	ZPH72012C54
3-1/2	ZPH72008C56	ZPH72010F56	ZPH72014C56	ZPH72051C56	ZPH72038C56	ZPH72012C56
3-5/8	ZPH72008C58	ZPH72010F58	ZPH72014C58	ZPH72051C58	ZPH72038C58	ZPH72012C58
3-3/4	ZPH72008C60	ZPH72010F60	ZPH72014C60	ZPH72051C60	ZPH72038C60	ZPH72012C60
3-7/8	ZPH72008C62	ZPH72010F62	ZPH72014C62	ZPH72051C62	ZPH72038C62	ZPH72012C62
4	ZPH72008C64	ZPH72010F64	ZPH72014C64	ZPH72051C64	ZPH72038C64	ZPH72012C64

Flange Hex Head Cap Screw — Inch

Product Information

When a bolt is used in an application that is primarily tension, both the head and nut should be heavy enough to handle tension loads. The heavy heads of a Prairie Bolt™ are designed with a flange which increases surface contact, improves holding power, and distributes loads over a larger area than standard hex head and socket head cap screws. The flange head's built-in washer prevents crushing thinner materials and is also a good choice for fastening aluminum, copper and composites. The head height includes the 1/16" flange thickness. Class 2A thread fit. Available in socket head or hex head styles.

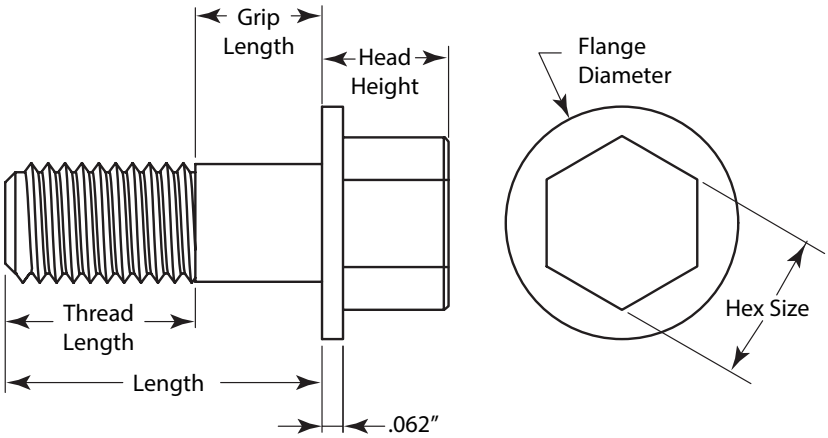

18-8 SS

316 SS

17-4 PH SS

Aluminum

Dimensions Table — Inch

Thread Size	Hex Size	O'all Head Height	Flange Diameter	Flange Thickness	Thread Length	Unthreaded Shank Dia.
8-32	1/4	7/32	15/32	1/16	3/16	.163 - .160
10-32	5/16	15/64	1/2	1/16	3/8	.189 - .186
1/4-20	3/8	9/32	9/16	1/16	7/16	.249 - .246
5/16-18	1/2	21/64	11/16	1/16	1/2	.312 - .309
3/8-16	9/16	25/64	13/16	1/16	5/8	.374 - .371
1/2-13	3/4	33/64	1-5/64	1/16	3/4	.499 - .495

Flanged Hex Head Cap Screws — Inch

Aluminum, Brass

Product Information

Fully threaded hex head screws can be screwed all the way into a threaded or tapped hole. Partially threaded hex head screws have an unthreaded portion under the head that adds strength but prevents them from being screwed all the way into a threaded hole. The flange acts as a built-in washer, distributing the load over a larger area. This helps prevent the screw from pulling through the material or damaging the surface. Screws have a Class 2A thread fit.

- AMPG products are made in the USA, precision machined from DFARS compliant material, and lot traceable.
- Flanged Hex Head Cap Screws meet IFI 111 standards.
- Aluminum screws meet material specifications ASTM B211/B211M.
- Brass screws meet material specifications ASTM B16.

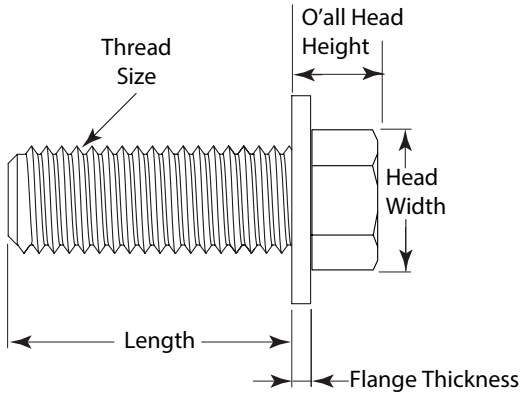

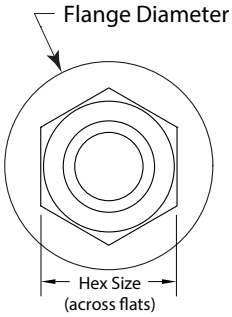

Dimensions Table — Inch			
Thread Size	**Flange Diameter (Nominal)**	**Head Width (Nominal)**	**O'all Head Height (Nominal)**
1/4-20	9/16	3/8	9/32
5/16-18	11/16	1/2	21/64
3/8-16	13/16	9/16	25/64
1/2-13	1-5/64	3/4	33/64
5/8-11	1-21/64	15/16	5/8
3/4-10	1-19/32	1-1/8	47/64

Flanged Hex Head Cap Screws — Inch

Aluminum, Brass

1/4-20 Thread Size

Length	Full/Partial Threads	Min. Thread Lg	Aluminum Part Number	Aluminum, Black Anodized Part Number	Brass Part Number
1/2	Fully Threaded	—	ZFH72114C08	ZFH72114C08-BK	ZFH40614C08
5/8	Fully Threaded	—	ZFH72114C10	ZFH72114C10-BK	ZFH40614C10
3/4	Fully Threaded	—	ZFH72114C12	ZFH72114C12-BK	ZFH40614C12
1	Fully Threaded	—	ZFH72114C16	ZFH72114C16-BK	ZFH40614C16
1 1/4	Fully Threaded	—	ZFH72114C20	ZFH72114C20-BK	ZFH40614C20
1 1/2	Partially Threaded	3/4	ZFH72114C24	ZFH72114C24-BK	ZFH40614C24
2	Partially Threaded	3/4	ZFH72114C32	ZFH72114C32-BK	ZFH40614C32
2 1/2	Partially Threaded	3/4	ZFH72114C40	ZFH72114C40-BK	ZFH40614C40

5/16-18 Thread Size

Length	Full/Partial Threads	Min. Thread Lg	Aluminum Part Number	Aluminum, Black Anodized Part Number	Brass Part Number
3/4	Fully Threaded	—	ZFH72151C12	ZFH72151C12-BK	ZFH40651C12
1	Fully Threaded	—	ZFH72151C16	ZFH72151C16-BK	ZFH40651C16
1 1/4	Fully Threaded	—	ZFH72151C20	ZFH72151C20-BK	ZFH40651C20
1 1/2	Partially Threaded	7/8	ZFH72151C24	ZFH72151C24-BK	ZFH40651C24
2	Partially Threaded	7/8	ZFH72151C32	ZFH72151C32-BK	ZFH40651C32
3	Partially Threaded	7/8	ZFH72151C48	ZFH72151C48-BK	ZFH40651C48

Flanged Hex Head Cap Screws — Inch

Aluminum, Brass

3/8-16 Thread Size

Length	Full/Partial Threads	Min. Thread Lg	Aluminum Part Number	Aluminum, Black Anodized Part Number	Brass Part Number
3/4	Fully Threaded	—	ZFH72138C12	ZFH72138C12-BK	ZFH40638C12
1	Fully Threaded	—	ZFH72138C16	ZFH72138C16-BK	ZFH40638C16
1 1/4	Fully Threaded	—	ZFH72138C20	ZFH72138C20-BK	ZFH40638C20
1 1/2	Fully Threaded	—	ZFH72138C24	ZFH72138C24-BK	ZFH40638C24
1 3/4	Partially Threaded	1	ZFH72138C28	ZFH72138C28-BK	ZFH40638C28
2	Partially Threaded	1	ZFH72138C32	ZFH72138C32-BK	ZFH40638C32
2 1/2	Partially Threaded	1	ZFH72138C40	ZFH72138C40-BK	ZFH40638C40
3	Partially Threaded	1	ZFH72138C48	ZFH72138C48-BK	ZFH40638C48
3 1/2	Partially Threaded	1	ZFH72138C56	ZFH72138C56-BK	ZFH40638C56
4	Partially Threaded	1	ZFH72138C64	ZFH72138C64-BK	ZFH40638C64

1/2-13 Thread Size

Length	Full/Partial Threads	Min. Thread Lg	Aluminum Part Number	Aluminum, Black Anodized Part Number	Brass Part Number
1	Fully Threaded	—	ZFH72112C16	ZFH72112C16-BK	ZFH40612C16
1 1/4	Fully Threaded	—	ZFH72112C20	ZFH72112C20-BK	ZFH40612C20
1 1/2	Fully Threaded	—	ZFH72112C24	ZFH72112C24-BK	ZFH40612C24
1 3/4	Fully Threaded	—	ZFH72112C28	ZFH72112C28-BK	ZFH40612C28
2	Partially Threaded	1-1/4	ZFH72112C32	ZFH72112C32-BK	ZFH40612C32
2 1/2	Partially Threaded	1-1/4	ZFH72112C40	ZFH72112C40-BK	ZFH40612C40
3	Partially Threaded	1-1/4	ZFH72112C48	ZFH72112C48-BK	ZFH40612C48
4	Partially Threaded	1-1/4	ZFH72112C64	ZFH72112C64-BK	ZFH40612C64

Flanged Hex Head Cap Screws — Inch

Aluminum, Brass

5/8-11 Thread Size

Length	Full/Partial Threads	Min. Thread Lg	Aluminum Part Number	Aluminum, Black Anodized Part Number	Brass Part Number
1 1/2	Fully Threaded	—	ZFH72158C24	ZFH72158C24-BK	ZFH40658C24
2	Fully Threaded	—	ZFH72158C32	ZFH72158C32-BK	ZFH40658C32
2 1/2	Fully Threaded	—	ZFH72158C40	ZFH72158C40-BK	ZFH40658C40
3	Partially Threaded	1-1/2	ZFH72158C48	ZFH72158C48-BK	ZFH40658C48
3 1/2	Partially Threaded	1-1/2	ZFH72158C56	ZFH72158C56-BK	ZFH40658C56
4	Partially Threaded	1-1/2	ZFH72158C64	ZFH72158C64-BK	ZFH40658C64

3/4-10 Thread Size

Length	Full/Partial Threads	Min. Thread Lg	Aluminum Part Number	Aluminum, Black Anodized Part Number	Brass Part Number
2	Fully Threaded	—	ZFH72134C32	ZFH72134C32-BK	ZFH40634C32
2 1/2	Fully Threaded	—	ZFH72134C40	ZFH72134C40-BK	ZFH40634C40
3	Partially Threaded	1-3/4	ZFH72134C48	ZFH72134C48-BK	ZFH40634C48
3 1/2	Partially Threaded	1-3/4	ZFH72134C56	ZFH72134C56-BK	ZFH40634C56
4	Partially Threaded	1-3/4	ZFH72134C64	ZFH72134C64-BK	ZFH40634C64

Flanged Hex Head Cap Screws — Metric

Aluminum, Brass

Product Information

Fully threaded hex head screws can be screwed all the way into a threaded or tapped hole. Partially threaded hex head screws have an unthreaded portion under the head that adds strength but prevents them from being screwed all the way into a threaded hole. The flange acts as a built-in washer, distributing the load over a larger area. This helps prevent the screw from pulling through the material or damaging the surface. Screws have a Class 6g thread fit.

- AMPG products are made in the USA, precision machined from DFARS compliant material, and lot traceable.
- Flanged Hex Head Cap Screws meet IFI 111 standards.
- Aluminum screws meet material specifications ASTM B211/B211M.
- Brass screws meet material specifications ASTM B16.

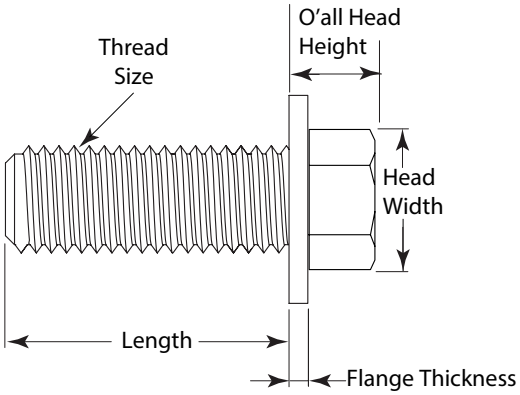

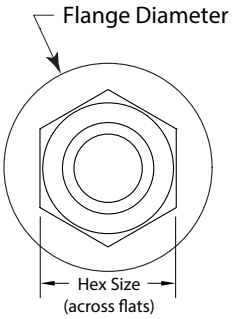

Dimensions Table — Metric

Thread Size	Flange Diameter (Nominal)	Head Width (Nominal)	O'all Head Height (Nominal)
M6 x 1	14.20	10.00	6.60
M8 x 1.25	18.00	13.00	8.10
M10 x 1.5	22.30	15.00	9.20
M12 x 1.75	26.60	16.00	11.50

For technical drawings and charts, please see page C-142

Flanged Hex Head Cap Screws — Metric

Aluminum, Brass

M6 x 1 Thread Size

Length	Full/Partial Threads	Min. Thread Lg	Aluminum Part Number	Aluminum, Black Anodized Part Number	Brass Part Number
12 mm	Fully Threaded	—	ZFH721M6CX12	ZFH721M6CX12-BK	ZFH406M6CX12
16 mm	Fully Threaded	—	ZFH721M6CX16	ZFH721M6CX16-BK	ZFH406M6CX16
20 mm	Fully Threaded	—	ZFH721M6CX20	ZFH721M6CX20-BK	ZFH406M6CX20
25 mm	Fully Threaded	—	ZFH721M6CX25	ZFH721M6CX25-BK	ZFH406M6CX25
30 mm	Fully Threaded	—	ZFH721M6CX30	ZFH721M6CX30-BK	ZFH406M6CX30
40 mm	Fully Threaded	—	ZFH721M6CX40	ZFH721M6CX40-BK	ZFH406M6CX40

M8 x 1.25Thread Size

Length	Full/Partial Threads	Min. Thread Lg	Aluminum Part Number	Aluminum, Black Anodized Part Number	Brass Part Number
16 mm	Fully Threaded	—	ZFH721M8CX16	ZFH721M8CX16-BK	ZFH406M8CX16
20 mm	Fully Threaded	—	ZFH721M8CX20	ZFH721M8CX20-BK	ZFH406M8CX20
25 mm	Fully Threaded	—	ZFH721M8CX25	ZFH721M8CX25-BK	ZFH406M8CX25
30 mm	Fully Threaded	—	ZFH721M8CX30	ZFH721M8CX30-BK	ZFH406M8CX30
35 mm	Fully Threaded	—	ZFH721M8CX35	ZFH721M8CX35-BK	ZFH406M8CX35
40 mm	Fully Threaded	—	ZFH721M8CX40	ZFH721M8CX40-BK	ZFH406M8CX40
45 mm	Fully Threaded	—	ZFH721M8CX45	ZFH721M8CX45-BK	ZFH406M8CX45
50 mm	Fully Threaded	—	ZFH721M8CX50	ZFH721M8CX50-BK	ZFH406M8CX50
60 mm	Fully Threaded	—	ZFH721M8CX60	ZFH721M8CX60-BK	ZFH406M8CX60

Flanged Hex Head Cap Screws — Metric

Aluminum, Brass

M10 x 1.5 Thread Size

Length	Full/Partial Threads	Min. Thread Lg	Aluminum Part Number	Aluminum, Black Anodized Part Number	Brass Part Number
20 mm	Fully Threaded	—	ZFH721M10CX20	ZFH721M10CX20-BK	ZFH406M10CX20
25 mm	Fully Threaded	—	ZFH721M10CX25	ZFH721M10CX25-BK	ZFH406M10CX25
30 mm	Fully Threaded	—	ZFH721M10CX30	ZFH721M10CX30-BK	ZFH406M10CX30
35 mm	Fully Threaded	—	ZFH721M10CX35	ZFH721M10CX35-BK	ZFH406M10CX35
40 mm	Fully Threaded	—	ZFH721M10CX40	ZFH721M10CX40-BK	ZFH406M10CX40
45 mm	Fully Threaded	—	ZFH721M10CX45	ZFH721M10CX45-BK	ZFH406M10CX45
50 mm	Fully Threaded	—	ZFH721M10CX50	ZFH721M10CX50-BK	ZFH406M10CX50
60 mm	Fully Threaded	—	ZFH721M10CX60	ZFH721M10CX60-BK	ZFH406M10CX60

M12 x 1.75 Thread Size

Length	Full/Partial Threads	Min. Thread Lg	Aluminum Part Number	Aluminum, Black Anodized Part Number	Brass Part Number
25 mm	Fully Threaded	—	ZFH721M12CX25	ZFH721M12CX25-BK	ZFH406M12CX25
30 mm	Fully Threaded	—	ZFH721M12CX30	ZFH721M12CX30-BK	ZFH406M12CX30
35 mm	Fully Threaded	—	ZFH721M12CX35	ZFH721M12CX35-BK	ZFH406M12CX35
40 mm	Fully Threaded	—	ZFH721M12CX40	ZFH721M12CX40-BK	ZFH406M12CX40
50 mm	Fully Threaded	—	ZFH721M12CX50	ZFH721M12CX50-BK	ZFH406M12CX50
60 mm	Fully Threaded	—	ZFH721M12CX60	ZFH721M12CX60-BK	ZFH406M12CX60

Serrated-Flange Hex Screws — Inch

18-8 SS, 316 SS

Product Information

Serrated Flange Hex Screws, also known as Whiz-Lock Bolts (trade name). They are unslotted hex head flange screws that have serrations under the flange, or on the bearing surface. The flange head has a built-in flange that acts as an integrated washer with serrations. Serrations provide additional grip and facilitate loosening due to vibration. The one-piece construction provides more strength than a regular hex screw and serrations eliminate the need for lock washers or lock nuts. Length is measured from under the Flange. Head Height includes flange thickness. These high-performance fasteners are made from 18-8 and 316 stainless steel. 18-8 stainless steel has excellent corrosion resistance and may be mildly magnetic. The 316 stainless steel is our most corrosion resistant stainless steel that withstands solvents and pitting caused by chloride and sulfur. May be mildly magnetic. Screws have a 2A Thread Fit.

- AMPG products are made in the USA, precision machined from DFARS compliant material, and lot traceable.
- IFI 111 and DIN 6921 standards allow for serrations on a hex flange screw.
- 18-8 stainless steel material meets ASTM A582.
- 316 stainless steel material meets ASTM A276.
- Stainless steel hex screws can receive a dark black-oxide surface finish.

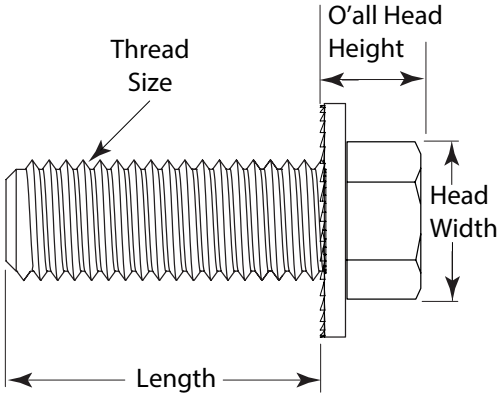

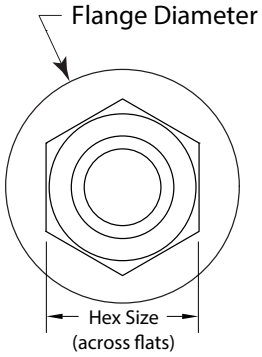

Dimensions Table — Inch			
Thread Size	Serrated Flange Diameter (Nominal)	Head Width (Nominal)	O'all Head Height (Nominal)
4-40	5/16	1/4	3/32
6-32	5/16 (1/4- 3/8), 23/64 (1/2 & up)	1/4	3/32
8-32	3/8	1/4	3/16
10-24	7/16	5/16	7/32
10-32	7/16	5/16	7/32
12-24	1/2	5/16	7/32
1/4-20	9/16	3/8	9/32
1/4-28	9/16	3/8	9/32
5/16-18	11/16	1/2	21/64

Dimensions Table — Inch			
Thread Size	Serrated Flange Diameter (Nominal)	Head Width (Nominal)	O'all Head Height (Nominal)
5/16-24	11/16	1/2	21/64
3/8-16	13/16	9/16	25/64
3/8-24	13/16	9/16	25/64
7/16-14	15/16	5/8	15/32
7/16-20	15/16	5/8	15/32
1/2-13	1-5/64	3/4	33/64
1/2-20	1-5/64	3/4	33/64
5/8-11	1-21/64	15/16	5/8
3/4-10	1-19/32	1-1/8	47/64
7/8-9	1-19/32	1-1/8	47/64

Serrated-Flange Hex Screws — Inch

18-8 SS, 316 SS

4-40 Thread Size

Lg.	Full or Partial Thread	18-8 SS Part Number	18-8 SS, Bl Ox. Part Number	316 SS Part Number	316 SS, Bl Ox. Part Number
1/2	Full	ZFHS60104C08	ZFHS60104C08-BX	ZFHS60204C08	ZFHS60204C08-BX

6-32 Thread Size

Lg.	Full or Partial Thread	18-8 SS Part Number	18-8 SS, Bl Ox. Part Number	316 SS Part Number	316 SS, Bl Ox. Part Number
1/4	Full	ZFHS60106C04	ZFHS60106C04-BX	ZFHS60206C04	ZFHS60206C04-BX
3/8	Full	ZFHS60106C06	ZFHS60106C06-BX	ZFHS60206C06	ZFHS60206C06-BX
1/2	Full	ZFHS60106C08	ZFHS60106C08-BX	ZFHS60206C08	ZFHS60206C08-BX
5/8	Full	ZFHS60106C10	ZFHS60106C10-BX	ZFHS60206C10	ZFHS60206C10-BX
3/4	Full	ZFHS60106C12	ZFHS60106C12-BX	ZFHS60206C12	ZFHS60206C12-BX
1	Full	ZFHS60106C16	ZFHS60106C16-BX	ZFHS60206C16	ZFHS60206C16-BX

8-32 Thread Size

Lg.	Full or Partial Thread	18-8 SS Part Number	18-8 SS, Bl Ox. Part Number	316 SS Part Number	316 SS, Bl Ox. Part Number
1/4	Full	ZFHS60108C04	ZFHS60108C04-BX	ZFHS60208C04	ZFHS60208C04-BX
5/16	Full	ZFHS60108C05	ZFHS60108C05-BX	ZFHS60208C05	ZFHS60208C05-BX
3/8	Full	ZFHS60108C06	ZFHS60108C06-BX	ZFHS60208C06	ZFHS60208C06-BX
1/2	Full	ZFHS60108C08	ZFHS60108C08-BX	ZFHS60208C08	ZFHS60208C08-BX
5/8	Full	ZFHS60108C10	ZFHS60108C10-BX	ZFHS60208C10	ZFHS60208C10-BX
3/4	Full	ZFHS60108C12	ZFHS60108C12-BX	ZFHS60208C12	ZFHS60208C12-BX
7/8	Full	ZFHS60108C14	ZFHS60108C14-BX	ZFHS60208C14	ZFHS60208C14-BX
1	Full	ZFHS60108C16	ZFHS60108C16-BX	ZFHS60208C16	ZFHS60208C16-BX
1-1/4	Full	ZFHS60108C20	ZFHS60108C20-BX	ZFHS60208C20	ZFHS60208C20-BX
1-1/2	Full	ZFHS60108C24	ZFHS60108C24-BX	ZFHS60208C24	ZFHS60208C24-BX
2	Full	ZFHS60108C32	ZFHS60108C32-BX	ZFHS60208C32	ZFHS60208C32-BX

10-24 Thread Size

Lg.	Full or Partial Thread	18-8 SS Part Number	18-8 SS, Bl Ox. Part Number	316 SS Part Number	316 SS, Bl Ox. Part Number
3/8	Full	ZFHS60110C06	ZFHS60110C06-BX	ZFHS60210C06	ZFHS60210C06-BX
1/2	Full	ZFHS60110C08	ZFHS60110C08-BX	ZFHS60210C08	ZFHS60210C08-BX
5/8	Full	ZFHS60110C10	ZFHS60110C10-BX	ZFHS60210C10	ZFHS60210C10-BX
3/4	Full	ZFHS60110C12	ZFHS60110C12-BX	ZFHS60210C12	ZFHS60210C12-BX
1	Full	ZFHS60110C16	ZFHS60110C16-BX	ZFHS60210C16	ZFHS60210C16-BX
1-1/4	Full	ZFHS60110C20	ZFHS60110C20-BX	ZFHS60210C20	ZFHS60210C20-BX
1-1/2	Full	ZFHS60110C24	ZFHS60110C24-BX	ZFHS60210C24	ZFHS60210C24-BX
2	Full	ZFHS60110C32	ZFHS60110C32-BX	ZFHS60210C32	ZFHS60210C32-BX
2-1/2	1-1/2 Min.	ZFHS60110C40-1.5	ZFHS60110C40-1.5-BX	ZFHS60210C40-1.5	ZFHS60210C40-1.5-BX

Serrated-Flange Hex Screws — Inch

18-8 SS, 316 SS

10-32 Thread Size

Lg.	Full or Partial Thread	18-8 SS Part Number	18-8 SS, Bl Ox. Part Number	316 SS Part Number	316 SS, Bl Ox. Part Number
1/4	Full	ZFHS60110F04	ZFHS60110F04-BX	ZFHS60210F04	ZFHS60210F04-BX
3/8	Full	ZFHS60110F06	ZFHS60110F06-BX	ZFHS60210F06	ZFHS60210F06-BX
1/2	Full	ZFHS60110F08	ZFHS60110F08-BX	ZFHS60210F08	ZFHS60210F08-BX
5/8	Full	ZFHS60110F10	ZFHS60110F10-BX	ZFHS60210F10	ZFHS60210F10-BX
3/4	Full	ZFHS60110F12	ZFHS60110F12-BX	ZFHS60210F12	ZFHS60210F12-BX
7/8	Full	ZFHS60110F14	ZFHS60110F14-BX	ZFHS60210F14	ZFHS60210F14-BX
1	Full	ZFHS60110F16	ZFHS60110F16-BX	ZFHS60210F16	ZFHS60210F16-BX
1-1/4	Full	ZFHS60110F20	ZFHS60110F20-BX	ZFHS60210F20	ZFHS60210F20-BX
1-1/2	Full	ZFHS60110F24	ZFHS60110F24-BX	ZFHS60210F24	ZFHS60210F24-BX
1-3/4	Full	ZFHS60110F28	ZFHS60110F28-BX	ZFHS60210F28	ZFHS60210F28-BX
2	Full	ZFHS60110F32	ZFHS60110F32-BX	ZFHS60210F32	ZFHS60210F32-BX
2-1/2	1-1/2 Min	ZFHS60110F40-1.5	ZFHS60110F40-1.5-BX	ZFHS60210F40-1.5	ZFHS60210F40-1.5-BX
3	1-1/2 Min	ZFHS60110F48-1.5	ZFHS60110F48-1.5-BX	ZFHS60210F48-1.5	ZFHS60210F48-1.5-BX

12-24 Thread Size

Lg.	Full or Partial Thread	18-8 SS Part Number	18-8 SS, Bl Ox. Part Number	316 SS Part Number	316 SS, Bl Ox. Part Number
1/2	Full	ZFHS601#12C08	ZFHS601#12C08-BX	ZFHS602#12C08	ZFHS602#12C08-BX
5/8	Full	ZFHS601#12C10	ZFHS601#12C10-BX	ZFHS602#12C10	ZFHS60212C10-BX
3/4	Full	ZFHS601#12C12	ZFHS601#12C12-BX	ZFHS602#12C12	ZFHS602#12C12-BX
1	Full	ZFHS601#12C16	ZFHS601#12C16-BX	ZFHS602#12C16	ZFHS602#12C16-BX
1-1/4	Full	ZFHS601#12C20	ZFHS601#12C20-BX	ZFHS602#12C20	ZFHS602#12C20-BX
1-1/2	Full	ZFHS601#12C24	ZFHS601#12C24-BX	ZFHS602#12C24	ZFHS602#12C24-BX
2	Full	ZFHS601#12C32	ZFHS601#12C32-BX	ZFHS602#12C32	ZFHS602#12C32-BX

Serrated-Flange Hex Screws — Inch

18-8 SS, 316 SS

1/4-20 Thread Size

Lg.	Full or Partial Thread	18-8 SS Part Number	18-8 SS, Bl Ox. Part Number	316 SS Part Number	316 SS, Bl Ox. Part Number
3/8	Full	ZFHS60114C06	ZFHS60114C06-BX	ZFHS60214C06	ZFHS60214C06-BX
1/2	Full	ZFHS60114C08	ZFHS60114C08-BX	ZFHS60214C08	ZFHS60214C08-BX
5/8	Full	ZFHS60114C10	ZFHS60114C10-BX	ZFHS60214C10	ZFHS60214C10-BX
3/4	Full	ZFHS60114C12	ZFHS60114C12-BX	ZFHS60214C12	ZFHS60214C12-BX
7/8	Full	ZFHS60114C14	ZFHS60114C14-BX	ZFHS60214C14	ZFHS60214C14-BX
1	Full	ZFHS60114C16	ZFHS60114C16-BX	ZFHS60214C16	ZFHS60214C16-BX
1-1/8	Full	ZFHS60114C18	ZFHS60114C18-BX	ZFHS60214C18	ZFHS60214C18-BX
1-1/4	Full	ZFHS60114C20	ZFHS60114C20-BX	ZFHS60214C20	ZFHS60214C20-BX
1-1/4	3/4 Min	ZFHS60114C20-.75	ZFHS60114C20-.75-BX	ZFHS60214C20-.75	ZFHS60214C20-.75-BX
1-1/2	Full	ZFHS60114C24	ZFHS60114C24-BX	ZFHS60214C24	ZFHS60214C24-BX
1-1/2	3/4 Min	ZFHS60114C24-.75	ZFHS60114C24-.75-BX	ZFHS60214C24-.75	ZFHS60214C24-.75-BX
1-3/4	Full	ZFHS60114C28	ZFHS60114C28-BX	ZFHS60214C28	ZFHS60214C28-BX
1-3/4	3/4 Min	ZFHS60114C28-.75	ZFHS60114C28-.75-BX	ZFHS60214C28-.75	ZFHS60214C28-.75-BX
2	Full	ZFHS60114C32	ZFHS60114C32-BX	ZFHS60214C32	ZFHS60214C32-BX
2	3/4 Min	ZFHS60114C32-.75	ZFHS60114C32-.75-BX	ZFHS60214C32-.75	ZFHS60214C32-.75-BX
2-1/4	Full	ZFHS60114C36	ZFHS60114C36-BX	ZFHS60214C36	ZFHS60214C36-BX
2-1/4	3/4 Min	ZFHS60114C36-.75	ZFHS60114C36-.75-BX	ZFHS60214C36-.75	ZFHS60214C36-.75-BX
2-1/2	Full	ZFHS60114C40	ZFHS60114C40-BX	ZFHS60214C40	ZFHS60214C40-BX
2-1/2	3/4 Min	ZFHS60114C40-.75	ZFHS60114C40-.75-BX	ZFHS60214C40-.75	ZFHS60214C40-.75-BX
2-3/4	3/4 Min	ZFHS60114C44-.75	ZFHS60114C44-.75-BX	ZFHS60214C44-.75	ZFHS60214C44-.75-BX
3	Full	ZFHS60114C48	ZFHS60114C48-BX	ZFHS60214C48	ZFHS60214C48-BX
3	3/4 Min	ZFHS60114C48-.75	ZFHS60114C48-.75-BX	ZFHS60214C48-.75	ZFHS60214C48-.75-BX
3-1/2	3/4 Min	ZFHS60114C56-.75	ZFHS60114C56-.75-BX	ZFHS60214C56-.75	ZFHS60214C56-.75-BX
4	Full	ZFHS60114C64	ZFHS60114C64-BX	ZFHS60214C64	ZFHS60214C64-BX

1/4-28 Thread Size

Lg.	Full or Partial Thread	18-8 SS Part Number	18-8 SS, Bl Ox. Part Number	316 SS Part Number	316 SS, Bl Ox. Part Number
1/2	Full	ZFHS60114F08	ZFHS60114F08-BX	ZFHS60214F08	ZFHS60214F08-BX
5/8	Full	ZFHS60114F10	ZFHS60114F10-BX	ZFHS60214F10	ZFHS60214F10-BX
3/4	Full	ZFHS60114F12	ZFHS60114F12-BX	ZFHS60214F12	ZFHS60214F12-BX
1	Full	ZFHS60114F16	ZFHS60114F16-BX	ZFHS60214F16	ZFHS60214F16-BX

Serrated-Flange Hex Screws — Inch

18-8 SS, 316 SS

5/16-18 Thread Size

Lg.	Full or Partial Thread	18-8 SS Part Number	18-8 SS, Bl Ox. Part Number	316 SS Part Number	316 SS, Bl Ox. Part Number
3/8	Full	ZFHS60151C06	ZFHS60151C06-BX	ZFHS60251C06	ZFHS60251C06-BX
1/2	Full	ZFHS60151C08	ZFHS60151C08-BX	ZFHS60251C08	ZFHS60251C08-BX
5/8	Full	ZFHS60151C10	ZFHS60151C10-BX	ZFHS60251C10	ZFHS60251C10-BX
3/4	Full	ZFHS60151C12	ZFHS60151C12-BX	ZFHS60251C12	ZFHS60251C12-BX
7/8	Full	ZFHS60151C14	ZFHS60151C14-BX	ZFHS60251C14	ZFHS60251C14-BX
1	Full	ZFHS60151C16	ZFHS60151C16-BX	ZFHS60251C16	ZFHS60251C16-BX
1-1/8	Full	ZFHS60151C18	ZFHS60151C18-BX	ZFHS60251C18	ZFHS60251C18-BX
1-1/4	Full	ZFHS60151C20	ZFHS60151C20-BX	ZFHS60251C20	ZFHS60251C20-BX
1-1/2	Full	ZFHS60151C24	ZFHS60151C24-BX	ZFHS60251C24	ZFHS60251C24-BX
1-1/2	7/8 Min	ZFHS60151C24-.88	ZFHS60151C24-.88-BX	ZFHS60251C24-.88	ZFHS60251C24-.88-BX
1-3/4	Full	ZFHS60151C28	ZFHS60151C28-BX	ZFHS60251C28	ZFHS60251C28-BX
1-3/4	7/8 Min	ZFHS60151C28-.88	ZFHS60151C28-.88-BX	ZFHS60251C28-.88	ZFHS60251C28-.88-BX
2	Full	ZFHS60151C32	ZFHS60151C32-BX	ZFHS60251C32	ZFHS60251C32-BX
2	7/8 Min	ZFHS60151C32-.88	ZFHS60151C32-.88-BX	ZFHS60251C32-.88	ZFHS60251C32-.88-BX
2-1/4	7/8 Min	ZFHS60151C36-.88	ZFHS60151C36-.88-BX	ZFHS60251C36-.88	ZFHS60251C36-.88-BX
2-1/2	Full	ZFHS60151C40	ZFHS60151C40-BX	ZFHS60251C40	ZFHS60251C40-BX
2-1/2	7/8 Min	ZFHS60151C40-.88	ZFHS60151C40-.88-BX	ZFHS60251C40-.88	ZFHS60251C40-.88-BX
3	Full	ZFHS60151C48	ZFHS60151C48-BX	ZFHS60251C48	ZFHS60251C48-BX
3	7/8 Min	ZFHS60151C48-.88	ZFHS60151C48-.88-BX	ZFHS60251C48-.88	ZFHS60251C48-.88-BX

5/16-24 Thread Size

Lg.	Full or Partial Thread	18-8 SS Part Number	18-8 SS, Bl Ox. Part Number	316 SS Part Number	316 SS, Bl Ox. Part Number
3/4	Full	ZFHS60151F12	ZFHS60151F12-BX	ZFHS60251F12	ZFHS60251F12-BX
1	Full	ZFHS60151F16	ZFHS60151F16-BX	ZFHS60251F16	ZFHS60251F16-BX
1-1/4	Full	ZFHS60151F20	ZFHS60151F20-BX	ZFHS60251F20	ZFHS60251F20-BX
1-1/2	Full	ZFHS60151F24	ZFHS60151F24-BX	ZFHS60251F24	ZFHS60251F24-BX

3/8-16 Thread Size

Lg.	Full or Partial Thread	18-8 SS Part Number	18-8 SS, Bl Ox. Part Number	316 SS Part Number	316 SS, Bl Ox. Part Number
3/8	Full	ZFHS60138C06	ZFHS60138C06-BX	ZFHS60238C06	ZFHS60238C06-BX
1/2	Full	ZFHS60138C08	ZFHS60138C08-BX	ZFHS60238C08	ZFHS60238C08-BX
5/8	Full	ZFHS60138C10	ZFHS60138C10-BX	ZFHS60238C10	ZFHS60238C10-BX
3/4	Full	ZFHS60138C12	ZFHS60138C12-BX	ZFHS60238C12	ZFHS60238C12-BX
7/8	Full	ZFHS60138C14	ZFHS60138C14-BX	ZFHS60238C14	ZFHS60238C14-BX
1	Full	ZFHS60138C16	ZFHS60138C16-BX	ZFHS60238C16	ZFHS60238C16-BX

Serrated-Flange Hex Screws — Inch

18-8 SS, 316 SS

3/8-16 Thread Size

Lg.	Full or Partial Thread	18-8 SS Part Number	18-8 SS, Bl Ox. Part Number	316 SS Part Number	316 SS, Bl Ox. Part Number
1-1/8	Full	ZFHS60138C18	ZFHS60138C18-BX	ZFHS60238C18	ZFHS60238C18-BX
1-1/4	Full	ZFHS60138C20	ZFHS60138C20-BX	ZFHS60238C20	ZFHS60238C20-BX
1-3/8	Full	ZFHS60138C22	ZFHS60138C22-BX	ZFHS60238C22	ZFHS60238C22-BX
1-1/2	Full	ZFHS60138C24	ZFHS60138C24-BX	ZFHS60238C24	ZFHS60238C24-BX
1-1/2	1 Min	ZFHS60138C24-1.00	ZFHS60138C24-1.00-BX	ZFHS60238C24-1.00	ZFHS60238C24-1.00-BX
1-5/8	Full	ZFHS60138C26	ZFHS60138C26-BX	ZFHS60238C26	ZFHS60238C26-BX
1-3/4	Full	ZFHS60138C28	ZFHS60138C28-BX	ZFHS60238C28	ZFHS60238C28-BX
1-3/4	1 Min	ZFHS60138C28-1.00	ZFHS60138C28-1.00-BX	ZFHS60238C28-1.00	ZFHS60238C28-1.00-BX
2	Full	ZFHS60138C32	ZFHS60138C32-BX	ZFHS60238C32	ZFHS60238C32-BX
2	1 Min	ZFHS60138C32-1.00	ZFHS60138C32-1.00-BX	ZFHS60238C32-1.00	ZFHS60238C32-1.00-BX
2-1/4	Full	ZFHS60138C36	ZFHS60138C36-BX	ZFHS60238C36	ZFHS60238C36-BX
2-1/4	1 Min	ZFHS60138C36-1.00	ZFHS60138C36-1.00-BX	ZFHS60238C36-1.00	ZFHS60238C36-1.00-BX
2-1/2	Full	ZFHS60138C40	ZFHS60138C40-BX	ZFHS60238C40	ZFHS60238C40-BX
2-1/2	1 Min	ZFHS60138C40-1.00	ZFHS60138C40-1.00-BX	ZFHS60238C40-1.00	ZFHS60238C40-1.00-BX
2-3/4	Full	ZFHS60138C44	ZFHS60138C44-BX	ZFHS60238C44	ZFHS60238C44-BX
2-3/4	1 Min	ZFHS60138C44-1.00	ZFHS60138C44-1.00-BX	ZFHS60238C44-1.00	ZFHS60238C44-1.00-BX
3	Full	ZFHS60138C48	ZFHS60138C48-BX	ZFHS60238C48	ZFHS60238C48-BX
3	1 Min	ZFHS60138C48-1.00	ZFHS60138C48-1.00-BX	ZFHS60238C48-1.00	ZFHS60238C48-1.00-BX
3-1/4	Full	ZFHS60138C52	ZFHS60138C52-BX	ZFHS60238C52	ZFHS60238C52-BX
3-1/4	1 Min	ZFHS60138C52-1.00	ZFHS60138C52-1.00-BX	ZFHS60238C52-1.00	ZFHS60238C52-1.00-BX
3-1/2	Full	ZFHS60138C56	ZFHS60138C56-BX	ZFHS60238C56	ZFHS60238C56-BX
3-1/2	1 Min	ZFHS60138C56-1.00	ZFHS60138C56-1.00-BX	ZFHS60238C56-1.00	ZFHS60238C56-1.00-BX
3-3/4	Full	ZFHS60138C60	ZFHS60138C60-BX	ZFHS60238C60	ZFHS60238C60-BX
3-3/4	1 Min	ZFHS60138C60-1.00	ZFHS60138C60-1.00-BX	ZFHS60238C60-1.00	ZFHS60238C60-1.00-BX
4	Full	ZFHS60138C64	ZFHS60138C64-BX	ZFHS60238C64	ZFHS60238C64-BX
4	1 Min	ZFHS60138C64-1.00	ZFHS60138C64-1.00-BX	ZFHS60238C64-1.00	ZFHS60238C64-1.00-BX
4-1/4	1 Min	ZFHS60138C68-1.00	ZFHS60138C68-1.00-BX	ZFHS60238C68-1.00	ZFHS60238C68-1.00-BX
4-1/2	Full	ZFHS60138C72	ZFHS60138C72-BX	ZFHS60238C72	ZFHS60238C72-BX
4-1/2	1 Min	ZFHS60138C72-1.00	ZFHS60138C72-1.00-BX	ZFHS60238C72-1.00	ZFHS60238C72-1.00-BX
5	Full	ZFHS60138C80	ZFHS60138C80-BX	ZFHS60238C80	ZFHS60238C80-BX
5	1 Min	ZFHS60138C80-1.00	ZFHS60138C80-1.00-BX	ZFHS60238C80-1.00	ZFHS60238C80-1.00-BX
5-1/2	1 Min	ZFHS60138C88-1.00	ZFHS60138C88-1.00-BX	ZFHS60238C88-1.00	ZFHS60238C88-1.00-BX
6	Full	ZFHS60138C96	ZFHS60138C96-BX	ZFHS60238C96	ZFHS60238C96-BX
6	1 Min	ZFHS60138C96-1.00	ZFHS60138C96-1.00-BX	ZFHS60238C96-1.00	ZFHS60238C96-1.00-BX
6-1/2	1 Min	ZFHS60138C104-1.00	ZFHS60138C104-1.00-BX	ZFHS60238C104-1.00	ZFHS60238C104-1.00-BX
7	Full	ZFHS60138C112	ZFHS60138C112-BX	ZFHS60238C112	ZFHS60238C112-BX
7	1 Min	ZFHS60138C112-1.00	ZFHS60138C112-1.00-BX	ZFHS60238C112-1.00	ZFHS60238C112-1.00-BX
7-1/2	1 Min	ZFHS60138C120-1.00	ZFHS60138C120-1.00-BX	ZFHS60238C120-1.00	ZFHS60238C120-1.00-BX
8	1 Min	ZFHS60138C128-1.00	ZFHS60138C128-1.00-BX	ZFHS60238C128-1.00	ZFHS60238C128-1.00-BX

Serrated-Flange Hex Screws — Inch

18-8 SS, 316 SS

3/8-24 Thread Size

Lg.	Full or Partial Thread	18-8 SS Part Number	18-8 SS, Bl Ox. Part Number	316 SS Part Number	316 SS, Bl Ox. Part Number
3/4	Full	ZFHS60138F12	ZFHS60138F12-BX	ZFHS60238F12	ZFHS60238F12-BX
1	Full	ZFHS60138F16	ZFHS60138F16-BX	ZFHS60238F16	ZFHS60238F16-BX
1-1/4	Full	ZFHS60138F20	ZFHS60138F20-BX	ZFHS60238F20	ZFHS60238F20-BX
1-1/2	Full	ZFHS60138F24	ZFHS60138F24-BX	ZFHS60238F24	ZFHS60238F24-BX
2	Full	ZFHS60138F32	ZFHS60138F32-BX	ZFHS60238F32	ZFHS60238F32-BX

7/16-14 Thread Size

Lg.	Full or Partial Thread	18-8 SS Part Number	18-8 SS, Bl Ox. Part Number	316 SS Part Number	316 SS, Bl Ox.Part Number
3/4	Full	ZFHS60171C12	ZFHS60171C12-BX	ZFHS60271C12	ZFHS60271C12-BX
1	Full	ZFHS60171C16	ZFHS60171C16-BX	ZFHS60271C16	ZFHS60271C16-BX
1-1/4	Full	ZFHS60171C20	ZFHS60171C20-BX	ZFHS60271C20	ZFHS60271C20-BX
1-1/2	Full	ZFHS60171C24	ZFHS60171C24-BX	ZFHS60271C24	ZFHS60271C24-BX
1-3/4	Full	ZFHS60171C28	ZFHS60171C28-BX	ZFHS60271C28	ZFHS60271C28-BX
2	Full	ZFHS60171C32	ZFHS60171C32-BX	ZFHS60271C32	ZFHS60271C32-BX
2	1-1/8 Min	ZFHS60171C32-1.13	ZFHS60171C32-1.13-BX	ZFHS60271C32-1.13	ZFHS60271C32-1.13-BX

7/16-20 Thread Size

Lg.	Full or Partial Thread	18-8 SS Part Number	18-8 SS, Bl Ox. Part Number	316 SS Part Number	316 SS, Bl Ox. Part Number
3/4	Full	ZFHS60171F12	ZFHS60171F12-BX	ZFHS60271F12	ZFHS60271F12-BX
1	Full	ZFHS60171F16	ZFHS60171F16-BX	ZFHS60271F16	ZFHS60271F16-BX

1/2-13 Thread Size

Lg.	Full or Partial Thread	18-8 SS Part Number	18-8 SS, Bl Ox. Part Number	316 SS Part Number	316 SS, Bl Ox. Part Number
3/4	Full	ZFHS60112C12	ZFHS60112C12-BX	ZFHS60212C12	ZFHS60212C12-BX
1	Full	ZFHS60112C16	ZFHS60112C16-BX	ZFHS60212C16	ZFHS60212C16-BX
1-1/4	Full	ZFHS60112C20	ZFHS60112C20-BX	ZFHS60212C20	ZFHS60212C20-BX
1-1/2	Full	ZFHS60112C24	ZFHS60112C24-BX	ZFHS60212C24	ZFHS60212C24-BX
1-3/4	Full	ZFHS60112C28	ZFHS60112C28-BX	ZFHS60212C28	ZFHS60212C28-BX
1-3/4	1-1/4 Min	ZFHS60112C28-1.25	ZFHS60112C28-1.25-BX	ZFHS60212C28-1.25	ZFHS60212C28-1.25-BX
2	Full	ZFHS60112C32	ZFHS60112C32-BX	ZFHS60212C32	ZFHS60212C32-BX
2	1-1/4 Min	ZFHS60112C32-1.25	ZFHS60112C32-1.25-BX	ZFHS60212C32-1.25	ZFHS60212C32-1.25-BX

Serrated-Flange Hex Screws — Inch

18-8 SS, 316 SS

1/2-13 Thread Size

Lg.	Full or Partial Thread	18-8 SS Part Number	18-8 SS, Bl Ox. Part Number	316 SS Part Number	316 SS, Bl Ox. Part Number
2-1/4	Full	ZFHS60112C36	ZFHS60112C36-BX	ZFHS60212C36	ZFHS60212C36-BX
2-1/4	1-1/4 Min	ZFHS60112C36-1.25	ZFHS60112C36-1.25-BX	ZFHS60212C36-1.25	ZFHS60212C36-1.25-BX
2-1/2	Full	ZFHS60112C40	ZFHS60112C40-BX	ZFHS60212C40	ZFHS60212C40-BX
2-1/2	1-1/4 Min	ZFHS60112C40-1.25	ZFHS60112C40-1.25-BX	ZFHS60212C40-1.25	ZFHS60212C40-1.25-BX
3	Full	ZFHS60112C48	ZFHS60112C48-BX	ZFHS60212C48	ZFHS60212C48-BX
3	1-1/4 Min	ZFHS60112C48-1.25	ZFHS60112C48-1.25-BX	ZFHS60212C48-1.25	ZFHS60212C48-1.25-BX
3-1/2	Full	ZFHS60112C56	ZFHS60112C56-BX	ZFHS60212C56	ZFHS60212C56-BX
3-1/2	1-1/4 Min	ZFHS60112C56-1.25	ZFHS60112C56-1.25-BX	ZFHS60212C56-1.25	ZFHS60212C56-1.25-BX
4	Full	ZFHS60112C64	ZFHS60112C64-BX	ZFHS60212C64	ZFHS60212C64-BX
4	1-1/4 Min	ZFHS60112C64-1.25	ZFHS60112C64-1.25-BX	ZFHS60212C64-1.25	ZFHS60212C64-1.25-BX
4-1/2	1-1/4 Min	ZFHS60112C72-1.25	ZFHS60112C72-1.25-BX	ZFHS60212C72-1.25	ZFHS60212C72-1.25-BX
5	1-1/4 Min	ZFHS60112C80-1.25	ZFHS60112C80-1.25-BX	ZFHS60212C80-1.25	ZFHS60212C80-1.25-BX
5-1/2	1-1/4 Min	ZFHS60112C88-1.25	ZFHS60112C88-1.25-BX	ZFHS60212C88-1.25	ZFHS60212C88-1.25-BX
6	1-1/4 Min	ZFHS60112C96-1.25	ZFHS60112C96-1.25-BX	ZFHS60212C96-1.25	ZFHS60212C96-1.25-BX

1/2-20 Thread Size

Lg.	Full or Partial Thread	18-8 SS Part Number	18-8 SS, Bl Ox. Part Number	316 SS Part Number	316 SS, Bl Ox. Part Number
1/2	Full	ZFHS60112F08	ZFHS60112F08-BX	ZFHS60212F08	ZFHS60212F08-BX
1	Full	ZFHS60112F16	ZFHS60112F16-BX	ZFHS60212F16	ZFHS60212F16-BX
1-1/4	Full	ZFHS60112F20	ZFHS60112F20-BX	ZFHS60212F20	ZFHS60212F20-BX
1-1/2	Full	ZFHS60112F24	ZFHS60112F24-BX	ZFHS60212F24	ZFHS60212F24-BX
1-3/4	Full	ZFHS60112F28	ZFHS60112F28-BX	ZFHS60212F28	ZFHS60212F28-BX
2	Full	ZFHS60112F32	ZFHS60112F32-BX	ZFHS60212F32	ZFHS60212F32-BX
3	Full	ZFHS60112F48	ZFHS60112F48-BX	ZFHS60212F48	ZFHS60212F48-BX

Serrated-Flange Hex Screws — Inch

18-8 SS, 316 SS

5/8-11 Thread Size

Lg.	Full or Partial Thread	18-8 SS Part Number	18-8 SS, Bl Ox. Part Number	316 SS Part Number	316 SS, Bl Ox. Part Number
3/4	Full	ZFHS60158C12	ZFHS60158C12-BX	ZFHS60258C12	ZFHS60258C12-BX
1	Full	ZFHS60158C16	ZFHS60158C16-BX	ZFHS60258C16	ZFHS60258C16-BX
1-1/4	Full	ZFHS60158C20	ZFHS60158C20-BX	ZFHS60258C20	ZFHS60258C20-BX
1-1/2	Full	ZFHS60158C24	ZFHS60158C24-BX	ZFHS60258C24	ZFHS60258C24-BX
1-3/4	Full	ZFHS60158C28	ZFHS60158C28-BX	ZFHS60258C28	ZFHS60258C28-BX
2	Full	ZFHS60158C32	ZFHS60158C32-BX	ZFHS60258C32	ZFHS60258C32-BX
2-1/4	Full	ZFHS60158C36	ZFHS60158C36-BX	ZFHS60258C36	ZFHS60258C36-BX
2-1/4	1-1/2 Min	ZFHS60158C36-1.50	ZFHS60158C36-1.50-BX	ZFHS60258C36-1.50	ZFHS60258C36-1.50-BX
2-1/2	Full	ZFHS60158C40	ZFHS60158C40-BX	ZFHS60258C40	ZFHS60258C40-BX
2-1/2	1-1/2 Min	ZFHS60158C40-1.50	ZFHS60158C40-1.50-BX	ZFHS60258C40-1.50	ZFHS60258C40-1.50-BX
2-3/4	Full	ZFHS60158C44	ZFHS60158C44-BX	ZFHS60258C44	ZFHS60258C44-BX
2-3/4	1-1/2 Min	ZFHS60158C44-1.50	ZFHS60158C44-1.50-BX	ZFHS60258C44-1.50	ZFHS60258C44-1.50-BX
3	Full	ZFHS60158C48	ZFHS60158C48-BX	ZFHS60258C48	ZFHS60258C48-BX
3	1-1/2 Min	ZFHS60158C48-1.50	ZFHS60158C48-1.50-BX	ZFHS60258C48-1.50	ZFHS60258C48-1.50-BX
3-1/4	Full	ZFHS60158C52	ZFHS60158C52-BX	ZFHS60258C52	ZFHS60258C52-BX
3-1/4	1-1/2 Min	ZFHS60158C52-1.50	ZFHS60158C52-1.50-BX	ZFHS60258C52-1.50	ZFHS60258C52-1.50-BX
3-1/2	Full	ZFHS60158C56	ZFHS60158C56-BX	ZFHS60258C56	ZFHS60258C56-BX
3-1/2	1-1/2 Min	ZFHS60158C56-1.50	ZFHS60158C56-1.50-BX	ZFHS60258C56-1.50	ZFHS60258C56-1.50-BX
4	Full	ZFHS60158C64	ZFHS60158C64-BX	ZFHS60258C64	ZFHS60258C64-BX
4	1-1/2 Min	ZFHS60158C64-1.50	ZFHS60158C64-1.50-BX	ZFHS60258C64-1.50	ZFHS60258C64-1.50-BX
4-1/2	1-1/2 Min	ZFHS60158C72-1.50	ZFHS60158C72-1.50-BX	ZFHS60258C72-1.50	ZFHS60258C72-1.50-BX
5	Full	ZFHS60158C80	ZFHS60158C80-BX	ZFHS60258C80	ZFHS60258C80-BX
5	1-1/2 Min	ZFHS60158C80-1.50	ZFHS60158C80-1.50-BX	ZFHS60258C80-1.50	ZFHS60258C80-1.50-BX
5-1/2	1-1/2 Min	ZFHS60158C88-1.50	ZFHS60158C88-1.50-BX	ZFHS60258C88-1.50	ZFHS60258C88-1.50-BX
6	Full	ZFHS60158C96	ZFHS60158C96-BX	ZFHS60258C96	ZFHS60258C96-BX
6	1-1/2 Min	ZFHS60158C96-1.50	ZFHS60158C96-1.50-BX	ZFHS60258C96-1.50	ZFHS60258C96-1.50-BX

Serrated-Flange Hex Screws — Inch

18-8 SS, 316 SS

3/4-10 Thread Size

Lg.	Full or Partial Thread	18-8 SS Part Number	18-8 SS, Bl Ox. Part Number	316 SS Part Number	316 SS, Bl Ox. Part Number
1	Full	ZFHS60134C16	ZFHS60134C16-BX	ZFHS60234C16	ZFHS60234C16-BX
1-1/4	Full	ZFHS60134C20	ZFHS60134C20-BX	ZFHS60234C20	ZFHS60234C20-BX
1-1/2	Full	ZFHS60134C24	ZFHS60134C24-BX	ZFHS60234C24	ZFHS60234C24-BX
1-3/4	Full	ZFHS60134C28	ZFHS60134C28-BX	ZFHS60234C28	ZFHS60234C28-BX
2	Full	ZFHS60134C32	ZFHS60134C32-BX	ZFHS60234C32	ZFHS60234C32-BX
2	1-3/4 Min	ZFHS60134C32-1.75	ZFHS60134C32-1.75-BX	ZFHS60234C32-1.75	ZFHS60234C32-1.75-BX
2-1/4	Full	ZFHS60134C36	ZFHS60134C36-BX	ZFHS60234C36	ZFHS60234C36-BX
2-1/2	Full	ZFHS60134C40	ZFHS60134C40-BX	ZFHS60234C40	ZFHS60234C40-BX
2-3/4	1-3/4 Min	ZFHS60134C44-1.75	ZFHS60134C44-1.75-BX	ZFHS60234C44-1.75	ZFHS60234C44-1.75-BX
3	Full	ZFHS60134C48	ZFHS60134C48-BX	ZFHS60234C48	ZFHS60234C48-BX
3	1-3/4 Min	ZFHS60134C48-1.75	ZFHS60134C48-1.75-BX	ZFHS60234C48-1.75	ZFHS60234C48-1.75-BX
3-1/4	1-3/4 Min	ZFHS60134C52-1.75	ZFHS60134C52-1.75-BX	ZFHS60234C52-1.75	ZFHS60234C52-1.75-BX
3-1/2	Full	ZFHS60134C56	ZFHS60134C56-BX	ZFHS60234C56	ZFHS60234C56-BX

7/8-9 Thread Size

Lg.	Full or Partial Thread	18-8 SS Part Number	18-8 SS, Bl Ox. Part Number	316 SS Part Number	316 SS, Bl Ox. Part Number
2-1/2	Full	ZFHS60178C40	ZFHS60178C40-BX	ZFHS60278C40	ZFHS60278C40-BX

18-8 SS
316 SS

Serrated-Flange Hex Screws — Metric

18-8 SS, 316 SS

Product Information

Serrated Flange Hex Screws, also known as Whiz-Lock Bolts (trade name). They are unslotted hex head flange screws that have serrations under the flange, or on the bearing surface. The flange head has a built-in flange that acts as an integrated washer with serrations. Serrations provide additional grip and facilitate loosening due to vibration. The one-piece construction provides more strength than a regular hex screw and serrations eliminate the need for lock washers or lock nuts. Length is measured from under the Flange. Head Height includes flange thickness. These high-performance fasteners are made from 18-8 and 316 stainless steel. 18-8 stainless steel has excellent corrosion resistance and may be mildly magnetic. The 316 stainless steel is our most corrosion resistant stainless steel that withstands solvents and pitting caused by chloride and sulfur. May be mildly magnetic. Screws have a 6g Thread Fit.

- AMPG products are made in the USA, precision machined from DFARS compliant material, and lot traceable.
- IFI 111 and DIN 6921 standards allow for serrations on a hex flange screw.
- 18-8 stainless steel material meets ASTM A582.
- 316 stainless steel material meets ASTM A276.
- Stainless steel hex screws can receive a dark black-oxide surface finish.

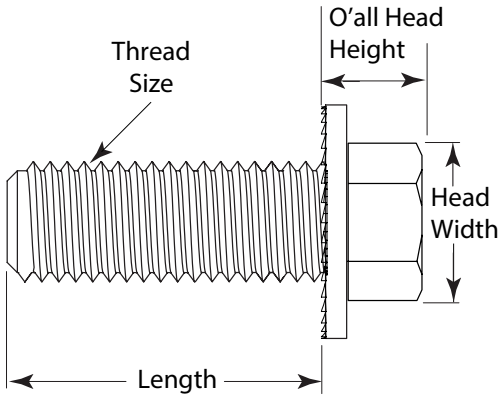

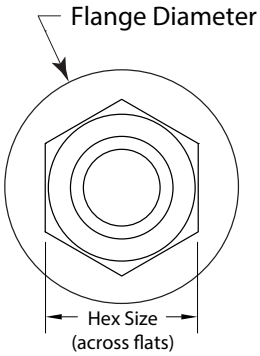

Dimensions Table — Metric

Thread Size	Serrated Flange Diameter (Nominal)	Head Width (Nominal)	O'all Head Height (Nominal)
M3 x 0.5	8.00	5.50	3.60
M4 x 0.7	10.50	7.00	4.50
M5 x 0.8	11.80	8.00	5.40
M6 x 1	14.20	10.00	6.60
M8 x 1	18.00	13.00	8.10
M8 x 1.25	18.00	13.00	8.10
M10 x 1.5	22.30	15.00	9.20
M12 x 1.75	26.60	16.00	11.50
M16 x 2	35.00	21.00	14.40

18-8 SS
316 SS

Serrated-Flange Hex Screws — Metric

18-8 SS, 316 SS

M3 x 0.5 Thread Size

Lg.	Full or Partial Thread	18-8 SS Part Number	18-8 SS, Bl Ox. Part Number	316 SS Part Number	316 SS, Bl Ox. Part Number
6	Full	ZFHS601M3C6	ZFHS601M3C6-BX	ZFHS602M3C6	ZFHS602M3C6-BX
8	Full	ZFHS601M3C8	ZFHS601M3C8-BX	ZFHS602M3C8	ZFHS602M3C8-BX
10	Full	ZFHS601M3C10	ZFHS601M3C10-BX	ZFHS602M3C10	ZFHS602M3C10-BX
25	Full	ZFHS601M3C25	ZFHS601M3C25-BX	ZFHS602M3C25	ZFHS602M3C25-BX

M4 x 0.7 Thread Size

Lg.	Full or Partial Thread	18-8 SS Part Number	18-8 SS, Bl Ox. Part Number	316 SS Part Number	316 SS, Bl Ox. Part Number
6	Full	ZFHS601M4C6	ZFHS601M4C6-BX	ZFHS602M4C6	ZFHS602M4C6-BX
8	Full	ZFHS601M4C8	ZFHS601M4C8-BX	ZFHS602M4C8	ZFHS602M4C8-BX
10	Full	ZFHS601M4C10	ZFHS601M4C10-BX	ZFHS602M4C10	ZFHS602M4C10-BX
12	Full	ZFHS601M4C12	ZFHS601M4C12-BX	ZFHS602M4C12	ZFHS602M4C12-BX
16	Full	ZFHS601M4C16	ZFHS601M4C16-BX	ZFHS602M4C16	ZFHS602M4C16-BX
18	Full	ZFHS601M4C18	ZFHS601M4C18-BX	ZFHS602M4C18	ZFHS602M4C18-BX
20	Full	ZFHS601M4C20	ZFHS601M4C20-BX	ZFHS602M4C20	ZFHS602M4C20-BX
25	Full	ZFHS601M4C25	ZFHS601M4C25-BX	ZFHS602M4C25	ZFHS602M4C25-BX
30	Full	ZFHS601M4C30	ZFHS601M4C30-BX	ZFHS602M4C30	ZFHS602M4C30-BX

M5 x 0.8 Thread Size

Lg.	Full or Partial Thread	18-8 SS Part Number	18-8 SS, Bl Ox. Part Number	316 SS Part Number	316 SS, Bl Ox. Part Number
6	Full	ZFHS601M5C6	ZFHS601M5C6-BX	ZFHS602M5C6	ZFHS602M5C6-BX
8	Full	ZFHS601M5C8	ZFHS601M5C8-BX	ZFHS602M5C8	ZFHS602M5C8-BX
10	Full	ZFHS601M5C10	ZFHS601M5C10-BX	ZFHS602M5C10	ZFHS602M5C10-BX
12	Full	ZFHS601M5C12	ZFHS601M5C12-BX	ZFHS602M5C12	ZFHS602M5C12-BX
14	Full	ZFHS601M5C14	ZFHS601M5C14-BX	ZFHS602M5C14	ZFHS602M5C14-BX
15	Full	ZFHS601M5C15	ZFHS601M5C15-BX	ZFHS602M5C15	ZFHS602M5C15-BX
16	Full	ZFHS601M5C16	ZFHS601M5C16-BX	ZFHS602M5C16	ZFHS602M5C16-BX
18	Full	ZFHS601M5C18	ZFHS601M5C18-BX	ZFHS602M5C18	ZFHS602M5C18-BX
20	Full	ZFHS601M5C20	ZFHS601M5C20-BX	ZFHS602M5C20	ZFHS602M5C20-BX
25	Full	ZFHS601M5C25	ZFHS601M5C25-BX	ZFHS602M5C25	ZFHS602M5C25-BX
30	Full	ZFHS601M5C30	ZFHS601M5C30-BX	ZFHS602M5C30	ZFHS602M5C30-BX
30	16 Min	ZFHS601M5C30-16	ZFHS601M5C30-16-BX	ZFHS602M5C30-16	ZFHS602M5C30-16-BX
35	Full	ZFHS601M5C35	ZFHS601M5C35-BX	ZFHS602M5C35	ZFHS602M5C35-BX
35	16 Min	ZFHS601M5C35-16	ZFHS601M5C35-16-BX	ZFHS602M5C35-16	ZFHS602M5C35-16-BX
40	Full	ZFHS601M5C40	ZFHS601M5C40-BX	ZFHS602M5C40	ZFHS602M5C40-BX
40	16 Min	ZFHS601M5C40-16	ZFHS601M5C40-16-BX	ZFHS602M5C40-16	ZFHS602M5C40-16-BX

Serrated-Flange Hex Screws — Metric

18-8 SS, 316 SS

M5 x 0.8 Thread Size

Lg.	Full or Partial Thread	18-8 SS Part Number	18-8 SS, Bl Ox. Part Number	316 SS Part Number	316 SS, Bl Ox. Part Number
45	Full	ZFHS601M5C45	ZFHS601M5C45-BX	ZFHS602M5C45	ZFHS602M5C45-BX
50	Full	ZFHS601M5C50	ZFHS601M5C50-BX	ZFHS602M5C50	ZFHS602M5C50-BX
50	16 Min	ZFHS601M5C50-16	ZFHS601M5C50-16-BX	ZFHS602M5C50-16	ZFHS602M5C50-16-BX
55	16 Min	ZFHS601M5C55-16	ZFHS601M5C55-16-BX	ZFHS602M5C55-16	ZFHS602M5C55-16-BX
60	Full	ZFHS601M5C60	ZFHS601M5C60-BX	ZFHS602M5C60	ZFHS602M5C60-BX
65	16 Min	ZFHS601M5C65-16	ZFHS601M5C65-16-BX	ZFHS602M5C65-16	ZFHS602M5C65-16-BX
70	Full	ZFHS601M5C70	ZFHS601M5C70-BX	ZFHS602M5C70	ZFHS602M5C70-BX

M6 x 1 Thread Size

Lg.	Full or Partial Thread	18-8 SS Part Number	18-8 SS, Bl Ox. Part Number	316 SS Part Number	316 SS, Bl Ox. Part Number
8	Full	ZFHS601M6C8	ZFHS601M6C8-BX	ZFHS602M6C8	ZFHS602M6C8-BX
10	Full	ZFHS601M6C10	ZFHS601M6C10-BX	ZFHS602M6C10	ZFHS602M6C10-BX
12	Full	ZFHS601M6C12	ZFHS601M6C12-BX	ZFHS602M6C12	ZFHS602M6C12-BX
14	Full	ZFHS601M6C14	ZFHS601M6C14-BX	ZFHS602M6C14	ZFHS602M6C14-BX
15	Full	ZFHS601M6C15	ZFHS601M6C15-BX	ZFHS602M6C15	ZFHS602M6C15-BX
16	Full	ZFHS601M6C16	ZFHS601M6C16-BX	ZFHS602M6C16	ZFHS602M6C16-BX
18	Full	ZFHS601M6C18	ZFHS601M6C18-BX	ZFHS602M6C18	ZFHS602M6C18-BX
20	Full	ZFHS601M6C20	ZFHS601M6C20-BX	ZFHS602M6C20	ZFHS602M6C20-BX
22	Full	ZFHS601M6C22	ZFHS601M6C22-BX	ZFHS602M6C22	ZFHS602M6C22-BX
25	Full	ZFHS601M6C25	ZFHS601M6C25-BX	ZFHS602M6C25	ZFHS602M6C25-BX
25	18 Min	ZFHS601M6C25-18	ZFHS601M6C25-18-BX	ZFHS602M6C25-18	ZFHS602M6C25-18-BX
30	Full	ZFHS601M6C30	ZFHS601M6C30-BX	ZFHS602M6C30	ZFHS602M6C30-BX
30	18 Min	ZFHS601M6C30-18	ZFHS601M6C30-18-BX	ZFHS602M6C30-18	ZFHS602M6C30-18-BX
35	Full	ZFHS601M6C35	ZFHS601M6C35-BX	ZFHS602M6C35	ZFHS602M6C35-BX
35	18 Min	ZFHS601M6C35-18	ZFHS601M6C35-18-BX	ZFHS602M6C35-18	ZFHS602M6C35-18-BX
40	Full	ZFHS601M6C40	ZFHS601M6C40-BX	ZFHS602M6C40	ZFHS602M6C40-BX
40	18 Min	ZFHS601M6C40-18	ZFHS601M6C40-18-BX	ZFHS602M6C40-18	ZFHS602M6C40-18-BX
45	Full	ZFHS601M6C45	ZFHS601M6C45-BX	ZFHS602M6C45	ZFHS602M6C45-BX
45	18 Min	ZFHS601M6C45-18	ZFHS601M6C45-18-BX	ZFHS602M6C45-18	ZFHS602M6C45-18-BX
50	Full	ZFHS601M6C50	ZFHS601M6C50-BX	ZFHS602M6C50	ZFHS602M6C50-BX
55	Full	ZFHS601M6C55	ZFHS601M6C55-BX	ZFHS602M6C55	ZFHS602M6C55-BX
60	Full	ZFHS601M6C60	ZFHS601M6C60-BX	ZFHS602M6C60	ZFHS602M6C60-BX
65	Full	ZFHS601M6C65	ZFHS601M6C65-BX	ZFHS602M6C65	ZFHS602M6C65-BX

Serrated-Flange Hex Screws — Metric

18-8 SS, 316 SS

M6 x 1 Thread Size

Lg.	Full or Partial Thread	18-8 SS Part Number	18-8 SS, Bl Ox. Part Number	316 SS Part Number	316 SS, Bl Ox. Part Number
70	Full	ZFHS601M6C70	ZFHS601M6C70-BX	ZFHS602M6C70	ZFHS602M6C70-BX
70	18 Min	ZFHS601M6C70-18	ZFHS601M6C70-18-BX	ZFHS602M6C70-18	ZFHS602M6C70-18-BX
75	Full	ZFHS601M6C75	ZFHS601M6C75-BX	ZFHS602M6C75	ZFHS602M6C75-BX
80	18 Min	ZFHS601M6C80-18	ZFHS601M6C80-18-BX	ZFHS602M6C80-18	ZFHS602M6C80-18-BX
110	18 Min	ZFHS601M6C110-18	ZFHS601M6C110-18-BX	ZFHS602M6C110-18	ZFHS602M6C110-18-BX

M8 x 1 Thread Size

Lg.	Full or Partial Thread	18-8 SS Part Number	18-8 SS, Bl Ox. Part Number	316 SS Part Number	316 SS, Bl Ox. Part Number
20	Full	ZFHS601M8F20	ZFHS601M8F20-BX	ZFHS602M8F20	ZFHS602M8F20-BX

M8 x 1.25 Thread Size

Lg.	Full or Partial Thread	18-8 SS Part Number	18-8 SS, Bl Ox. Part Number	316 SS Part Number	316 SS, Bl Ox. Part Number
10	Full	ZFHS601M8C10	ZFHS601M8C10-BX	ZFHS602M8C10	ZFHS602M8C10-BX
12	Full	ZFHS601M8C12	ZFHS601M8C12-BX	ZFHS602M8C12	ZFHS602M8C12-BX
14	Full	ZFHS601M8C14	ZFHS601M8C14-BX	ZFHS602M8C14	ZFHS602M8C14-BX
15	Full	ZFHS601M8C15	ZFHS601M8C15-BX	ZFHS602M8C15	ZFHS602M8C15-BX
16	Full	ZFHS601M8C16	ZFHS601M8C16-BX	ZFHS602M8C16	ZFHS602M8C16-BX
18	Full	ZFHS601M8C18	ZFHS601M8C18-BX	ZFHS602M8C18	ZFHS602M8C18-BX
20	Full	ZFHS601M8C20	ZFHS601M8C20-BX	ZFHS602M8C20	ZFHS602M8C20-BX
22	Full	ZFHS601M8C22	ZFHS601M8C22-BX	ZFHS602M8C22	ZFHS602M8C22-BX
25	Full	ZFHS601M8C25	ZFHS601M8C25-BX	ZFHS602M8C25	ZFHS602M8C25-BX
30	Full	ZFHS601M8C30	ZFHS601M8C30-BX	ZFHS602M8C30	ZFHS602M8C30-BX
30	22 Min	ZFHS601M8C30-22	ZFHS601M8C30-22-BX	ZFHS602M8C30-22	ZFHS602M8C30-22-BX
35	Full	ZFHS601M8C35	ZFHS601M8C35-BX	ZFHS602M8C35	ZFHS602M8C35-BX
35	Full	ZFHS601M8C35-22	ZFHS601M8C35-22-BX	ZFHS602M8C35-22	ZFHS602M8C35-22-BX
40	Full	ZFHS601M8C40	ZFHS601M8C40-BX	ZFHS602M8C40	ZFHS602M8C40-BX
40	22 Min	ZFHS601M8C40-22	ZFHS601M8C40-22-BX	ZFHS602M8C40-22	ZFHS602M8C40-22-BX
45	Full	ZFHS601M8C45	ZFHS601M8C45-BX	ZFHS602M8C45	ZFHS602M8C45-BX
50	Full	ZFHS601M8C50	ZFHS601M8C50-BX	ZFHS602M8C50	ZFHS602M8C50-BX
50	22 Min	ZFHS601M8C50-22	ZFHS601M8C50-22-BX	ZFHS602M8C50-22	ZFHS602M8C50-22-BX
55	Full	ZFHS601M8C55	ZFHS601M8C55-BX	ZFHS602M8C55	ZFHS602M8C55-BX
60	Full	ZFHS601M8C60	ZFHS601M8C60-BX	ZFHS602M8C60	ZFHS602M8C60-BX
65	Full	ZFHS601M8C65	ZFHS601M8C65-BX	ZFHS602M8C65	ZFHS602M8C65-BX

Serrated-Flange Hex Screws — Metric

18-8 SS, 316 SS

M8 x 1.25 Thread Size

Lg.	Full or Partial Thread	18-8 SS Part Number	18-8 SS, Bl Ox. Part Number	316 SS Part Number	316 SS, Bl Ox. Part Number
65	22 Min	ZFHS601M8C65-22	ZFHS601M8C65-22-BX	ZFHS602M8C65-22	ZFHS602M8C65-22-BX
70	Full	ZFHS601M8C70	ZFHS601M8C70-BX	ZFHS602M8C70	ZFHS602M8C70-BX
75	22 Min	ZFHS601M8C75-22	ZFHS601M8C75-22-BX	ZFHS602M8C75-22	ZFHS602M8C75-22-BX
80	Full	ZFHS601M8C80	ZFHS601M8C80-BX	ZFHS602M8C80	ZFHS602M8C80-BX
80	22 Min	ZFHS601M8C80-22	ZFHS601M8C80-22-BX	ZFHS602M8C80-22	ZFHS602M8C80-22-BX
100	22 Min	ZFHS601M8C100-22	ZFHS601M8C100-22-BX	ZFHS602M8C100-22	ZFHS602M8C100-22-BX
150	22 Min	ZFHS601M8C150-22	ZFHS601M8C150-22-BX	ZFHS602M8C150-22	ZFHS602M8C150-22-BX

M10 x 1.5 Thread Size

Lg.	Full or Partial Thread	18-8 SS Part Number	18-8 SS, Bl Ox. Part Number	316 SS Part Number	316 SS, Bl Ox. Part Number
16	Full	ZFHS601M10C16	ZFHS601M10C16-BX	ZFHS602M10C16	ZFHS602M10C16-BX
20	Full	ZFHS601M10C20	ZFHS601M10C20-BX	ZFHS602M10C20	ZFHS602M10C20-BX
25	Full	ZFHS601M10C25	ZFHS601M10C25-BX	ZFHS602M10C25	ZFHS602M10C25-BX
30	Full	ZFHS601M10C30	ZFHS601M10C30-BX	ZFHS602M10C30	ZFHS602M10C30-BX
30	26 Min	ZFHS601M10C30-26	ZFHS601M10C30-26-BX	ZFHS602M10C30-26	ZFHS602M10C30-26-BX
35	Full	ZFHS601M10C35	ZFHS601M10C35-BX	ZFHS602M10C35	ZFHS602M10C35-BX
35	26 Min	ZFHS601M10C35-26	ZFHS601M10C35-26-BX	ZFHS602M10C35-26	ZFHS602M10C35-26-BX
40	Full	ZFHS601M10C40	ZFHS601M10C40-BX	ZFHS602M10C40	ZFHS602M10C40-BX
40	26 Min	ZFHS601M10C40-26	ZFHS601M10C40-26-BX	ZFHS602M10C40-26	ZFHS602M10C40-26-BX
45	Full	ZFHS601M10C45	ZFHS601M10C45-BX	ZFHS602M10C45	ZFHS602M10C45-BX
50	Full	ZFHS601M10C50	ZFHS601M10C50-BX	ZFHS602M10C50	ZFHS602M10C50-BX
50	26 Min	ZFHS601M10C50-26	ZFHS601M10C50-26-BX	ZFHS602M10C50-26	ZFHS602M10C50-26-BX
60	26 Min	ZFHS601M10C60-26	ZFHS601M10C60-26-BX	ZFHS602M10C60-26	ZFHS602M10C60-26-BX

Serrated-Flange Hex Screws — Metric

18-8 SS, 316 SS

M12 x 1.75 Thread Size

Lg.	Full or Partial Thread	18-8 SS Part Number	18-8 SS, Bl Ox. Part Number	316 SS Part Number	316 SS, Bl Ox. Part Number
20	Full	ZFHS601M12C20	ZFHS601M12C20-BX	ZFHS602M12C20	ZFHS602M12C20-BX
25	Full	ZFHS601M12C25	ZFHS601M12C25-BX	ZFHS602M12C25	ZFHS602M12C25-BX
30	Full	ZFHS601M12C30	ZFHS601M12C30-BX	ZFHS602M12C30	ZFHS602M12C30-BX
35	Full	ZFHS601M12C35	ZFHS601M12C35-BX	ZFHS602M12C35	ZFHS602M12C35-BX
40	Full	ZFHS601M12C40	ZFHS601M12C40-BX	ZFHS602M12C40	ZFHS602M12C40-BX
40	30 Min	ZFHS601M12C40-30	ZFHS601M12C40-30-BX	ZFHS602M12C40-30	ZFHS602M12C40-30-BX
45	Full	ZFHS601M12C45	ZFHS601M12C45-BX	ZFHS602M12C45	ZFHS602M12C45-BX
50	Full	ZFHS601M12C50	ZFHS601M12C50-BX	ZFHS602M12C50	ZFHS602M12C50-BX
50	30 Min	ZFHS601M12C50-30	ZFHS601M12C50-30-BX	ZFHS602M12C50-30	ZFHS602M12C50-30-BX
60	Full	ZFHS601M12C60	ZFHS601M12C60-BX	ZFHS602M12C60	ZFHS602M12C60-BX
120	30 Min	ZFHS601M12C120-30	ZFHS601M12C120-30-BX	ZFHS602M12C120-30	ZFHS602M12C120-30-BX

M16 x 2 Thread Size

Lg.	Full or Partial Thread	18-8 SS Part Number	18-8 SS, Bl Ox. Part Number	316 SS Part Number	316 SS, Bl Ox. Part Number
35	Full	ZFHS601M16C35	ZFHS601M16C35-BX	ZFHS602M16C35	ZFHS602M16C35-BX
40	Full	ZFHS601M16C40	ZFHS601M16C40-BX	ZFHS602M16C40	ZFHS602M16C40-BX
50	Full	ZFHS601M16C50	ZFHS601M16C50-BX	ZFHS602M16C50	ZFHS602M16C50-BX

Button Socket Head Cap Screw — Inch

18-8 SS | Plain

Product Information

AMPG offers harder to find sizes of button head screws. Made from 18-8 stainless steel, these may be mildly magnetic. Not recommended for high strength fastening. Screws have a Class 3A thread fit, a minimum tensile strength of 70,000 psi, and a minimum Rockwell hardness of B55. Screws listed are fully threaded and length is measured from under the head.

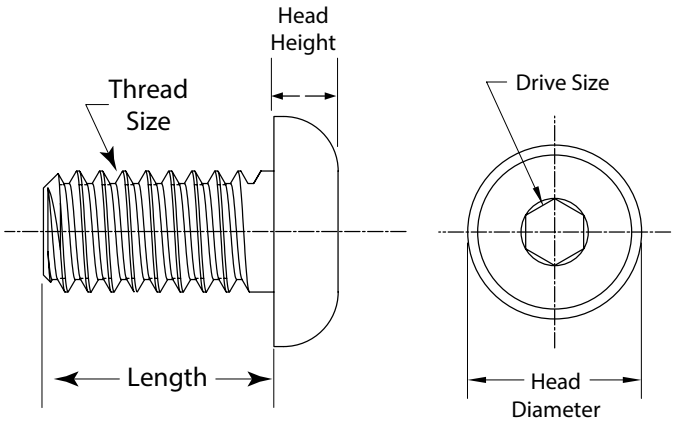

Dimensions Table — Inch				
Thread Size	**Head Diameter** (Max. to Min.)	**Head Height** (Max. to Min)	**Thread Designation**	**Drive Size**
5-44	.238 - 226	.066 - .056	UNF	5/64
6-40	.262 - .250	.073 - .063	UNF	5/64
6-48	.262 - .250	.073 - .063	UNS	5/64
8-36	.312 - .298	.087 - .077	UNF	3/32
8-40	.312 - .298	.087 - .077	UNS	3/32
10-24	.361 - .347	.101 - .091	UNC	1/8
10-32	.361 - .347	.101 - .091	UNF	1/8
12-28	.413 - .397	.114 - .104	UNF	5/32
1/4-20	.437 - .419	.132 - .122	UNC	5/32
1/4-32	.437 - .419	.132 - .122	NEF	5/32
5/16-18	.547 - .527	.166 - .152	UNC	3/16
5/16-32	.547 - .527	.166 - .152	NEF	3/16
3/8-16	.656 - .636	.199 - .185	UNC	7/32
3/8-32	.656 - .636	.199 - .185	UNEF	7/32

Button Socket Head Cap Screw — Inch

18-8 SS | Plain

5-44 Thread Size

Length	18-8 SS Part Number
1/4	ZBC118UNF
3/8	ZBC120UNF
1/2	ZBC121UNF

6-40 Thread Size

Length	18-8 SS Part Number
1/4	ZBC128UNF

6-48 Thread Size

Length	18-8 SS Part Number
1/4	ZBC124UNS
3/8	ZBC126UNS
1/2	ZBC128UNS

8-36 Thread Size

Length	18-8 SS Part Number
1/4	ZBC174UNF
3/8	ZBC176UNF
1/2	ZBC178UNF

8-40 Thread Size

Length	18-8 SS Part Number
1/4	ZBC174UNS
3/8	ZBC176UNS
1/2	ZBC178UNS

10-24 Thread Size

Length	18-8 SS Part Number
3/16	ZBC223UNC

10-32 Thread Size

Length	18-8 SS Part Number
1/8	ZBC272UNF

12-28 Thread Size

Length	18-8 SS Part Number
1/2	ZBC328UNF
3/4	ZBC331UNF
1	ZBC333UNF

1/4-20 Thread Size

Length	18-8 SS Part Number
3/16	ZBC383UNC

1/4-32 Thread Size

Length	18-8 SS Part Number
1/2	ZBC448UNEF
3/4	ZBC451UNEF
1	ZBC453UNEF

5/16-18 Thread Size

Length	18-8 SS Part Number
1/4	ZBC514UNC
5/16	ZBC515UNC

5/16-32 Thread Size

Length	18-8 SS Part Number
1/2	ZBC518UNEF
3/4	ZBC521UNEF
1	ZBC523UNEF

3/8-16 Thread Size

Length	18-8 SS Part Number
1/4	ZBC574UNC
3/8	ZBC576UNC

3/8-32 Thread Size

Length	18-8 SS Part Number
3/4	ZBC581UNEF
1	ZBC583UNEF
1-1/2	ZBC587UNEF

Button Head Socket Cap Screw — Inch

Brass | Plain

Product Information

Made from brass, these button head screws are corrosion resistant in wet environments, nonmagnetic, and electrically conductive. Inch screws have a Class 3A thread fit. Length is measured from under the head.

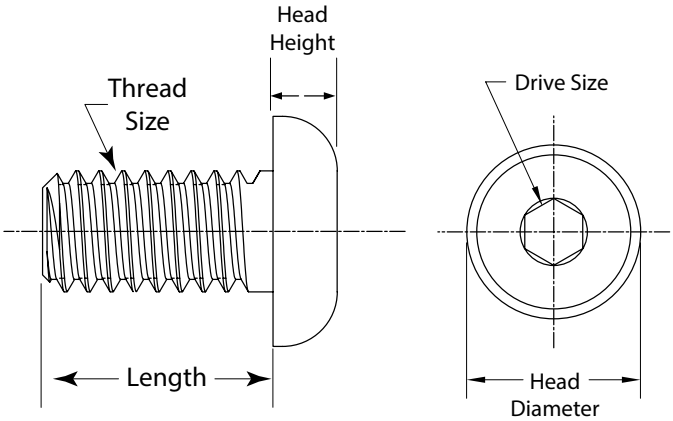

Dimensions Table — Inch

Thread Size	Head Diameter	Head Height	Drive Size
2-56	.164	.046	.050
2-64	.164	.046	.050
3-48	.188	.052	1/16
3-56	.188	.052	1/16
4-40	.213	.059	1/16
4-48	.213	.059	1/16
5-40	.238	.066	5/64
5-44	.238	.066	5/64
6-32	.262	.073	5/64
6-40	.262	.073	5/64
8-32	.312	.087	3/32
8-36	.312	.087	3/32
10-24	.361	.101	1/8

Thread Size	Head Diameter	Head Height	Drive Size
10-32	.361	.101	1/8
12-24	.413	.114	1/8
12-28	.413	.114	1/8
1/4-20	.437	.132	5/32
1/4-28	.437	.132	5/32
5/16-18	.547	.166	3/16
5/16-24	.547	.166	3/16
3/8-16	.656	.199	7/32
3/8-24	.656	.199	7/32
7/16-14	.750	.238	1/4
1/2-13	.750	.238	1/4
1/2-20	.875	.265	5/16
5/8-11	1.000	.331	3/8

Dimensions Table — Metric, mm

Thread Size	Head Diameter (Max. to Min.)	Head Height (Max. to Min.)	Hex Drive Size
M3 x 0.5mm	5.70 - 5.40	1.65 - 1.40	2
M4 x 0.7mm	7.60 - 7.20	2.20 - 2.00	2.5
M5 x 0.8mm	9.50 - 9.10	2.75 - 2.50	3
M6 x 1mm	10.50 - 10.00	3.30 - 3.10	4

Button Head Socket Cap Screw — Inch

Brass | Plain

2-56 Thread Size

Length	Fully or Partially Threaded	Brass Part Number
1/8	Fully Threaded	ZSB55002C02
5/32	Fully Threaded	ZSB55002C02.5
3/16	Fully Threaded	ZSB55002C03
1/4	Fully Threaded	ZSB55002C04
5/16	Fully Threaded	ZSB55002C05
3/8	Fully Threaded	ZSB55002C06
7/16	Fully Threaded	ZSB55002C07
1/2	Fully Threaded	ZSB55002C08

2-64 Thread Size

Length	Fully or Partially Threaded	Brass Part Number
1/4	Fully Threaded	ZSB55002F04
3/8	Fully Threaded	ZSB55002F06
1/2	Fully Threaded	ZSB55002F08

3-48 Thread Size

Length	Fully or Partially Threaded	Brass Part Number
1/8	Fully Threaded	ZSB55003C02
3/16	Fully Threaded	ZSB55003C03
1/4	Fully Threaded	ZSB55003C04
5/16	Fully Threaded	ZSB55003C05
3/8	Fully Threaded	ZSB55003C06
1/2	Fully Threaded	ZSB55003C08
5/8	Fully Threaded	ZSB55003C10
3/4	Fully Threaded	ZSB55003C12
1	Fully Threaded	ZSB55003C16

3-56 Thread Size

Length	Fully or Partially Threaded	Brass Part Number
1/4	Fully Threaded	ZSB55003F04
3/8	Fully Threaded	ZSB55003F06
1/2	Fully Threaded	ZSB55003F08

4-40 Thread Size

Length	Fully or Partially Threaded	Brass Part Number
1/8	Fully Threaded	ZSB55004C02
3/16	Fully Threaded	ZSB55004C03
1/4	Fully Threaded	ZSB55004C04
5/16	Fully Threaded	ZSB55004C05
3/8	Fully Threaded	ZSB55004C06
7/16	Fully Threaded	ZSB55004C07
1/2	Fully Threaded	ZSB55004C08
9/16	Fully Threaded	ZSB55004C09
5/8	Fully Threaded	ZSB55004C10
3/4	Fully Threaded	ZSB55004C12
7/8	Fully Threaded	ZSB55004C14
1	Fully Threaded	ZSB55004C16

4-48 Thread Size

Length	Fully or Partially Threaded	Brass Part Number
1/8	Fully Threaded	ZSB55004F02
3/16	Fully Threaded	ZSB55004F03
1/4	Fully Threaded	ZSB55004F04
3/8	Fully Threaded	ZSB55004F06
1/2	Fully Threaded	ZSB55004F08

5-40 Thread Size

Length	Fully or Partially Threaded	Brass Part Number
3/16	Fully Threaded	ZSB55005C03
1/4	Fully Threaded	ZSB55005C04
5/16	Fully Threaded	ZSB55005C05
3/8	Fully Threaded	ZSB55005C06
1/2	Fully Threaded	ZSB55005C08
5/8	Fully Threaded	ZSB55005C10
3/4	Fully Threaded	ZSB55005C12
1	Fully Threaded	ZSB55005C16

5-44 Thread Size

Length	Fully or Partially Threaded	Brass Part Number
1/4	Fully Threaded	ZSB55005F04
3/8	Fully Threaded	ZSB55005F06
1/2	Fully Threaded	ZSB55005F08

6-32 Thread Size

Length	Fully or Partially Threaded	Brass Part Number
1/8	Fully Threaded	ZSB55006C02
3/16	Fully Threaded	ZSB55006C03
5/16	Fully Threaded	ZSB55006C05
7/16	Fully Threaded	ZSB55006C07
9/16	Fully Threaded	ZSB55006C09
5/8	Fully Threaded	ZSB55006C10
3/4	Fully Threaded	ZSB55006C12
7/8	Fully Threaded	ZSB55006C14
1	Fully Threaded	ZSB55006C16

6-40 Thread Size

Length	Fully or Partially Threaded	Brass Part Number
3/16	Fully Threaded	ZSB55006F03
1/4	Fully Threaded	ZSB55006F04
3/8	Fully Threaded	ZSB55006F06
1/2	Fully Threaded	ZSB55006F08

Button Head Socket Cap Screw — Inch

Brass | Plain

8-32 Thread Size

Length	Full or Partially Threaded	Brass Part Number
1/8	Fully Threaded	ZSB55008C02
5/32	Fully Threaded	ZSB55008C02.5
3/16	Fully Threaded	ZSB55008C03
5/16	Fully Threaded	ZSB55008C05
7/16	Fully Threaded	ZSB55008C07
9/16	Fully Threaded	ZSB55008C09
5/8	Fully Threaded	ZSB55008C10
3/4	Fully Threaded	ZSB55008C12
7/8	Fully Threaded	ZSB55008C14
1	Fully Threaded	ZSB55008C16
1 1/8	Fully Threaded	ZSB55008C18
1 1/4	Partially Threaded	ZSB55008C20
1 3/8	Partially Threaded	ZSB55008C22
1 1/2	Partially Threaded	ZSB55008C24

8-36 Thread Size

Length	Full or Partially Threaded	Brass Part Number
1/4	Fully Threaded	ZSB55008F04
3/8	Fully Threaded	ZSB55008F06
1/2	Fully Threaded	ZSB55008F08

10-24 Thread Size

Length	Full or Partially Threaded	Brass Part Number
3/16	Fully Threaded	ZSB55010C03
5/16	Fully Threaded	ZSB55010C05
7/16	Fully Threaded	ZSB55010C07
9/16	Fully Threaded	ZSB55010C09
5/8	Fully Threaded	ZSB55010C10
7/8	Fully Threaded	ZSB55010C14
1 1/8	Fully Threaded	ZSB55010C18
1 1/4	Partially Threaded	ZSB55010C20
1 3/8	Partially Threaded	ZSB55010C22
1 1/2	Partially Threaded	ZSB55010C24
1 3/4	Partially Threaded	ZSB55010C28
2	Partially Threaded	ZSB55010C32

10-32 Thread Size

Length	Full or Partially Threaded	Brass Part Number
3/16	Fully Threaded	ZSB55010F03
5/16	Fully Threaded	ZSB55010F05
7/16	Fully Threaded	ZSB55010F07
9/16	Fully Threaded	ZSB55010F09
5/8	Fully Threaded	ZSB55010F10
3/4	Fully Threaded	ZSB55010F12
7/8	Fully Threaded	ZSB55010F14
1	Fully Threaded	ZSB55010F16
1 1/8	Fully Threaded	ZSB55010F18
1 1/4	Partially Threaded	ZSB55010F20
1 3/8	Partially Threaded	ZSB55010F22
1 1/2	Partially Threaded	ZSB55010F24
1 5/8	Partially Threaded	ZSB55010F26
1 3/4	Partially Threaded	ZSB55010F28
2	Partially Threaded	ZSB55010F32

12-24 Thread Size

Length	Full or Partially Threaded	Brass Part Number
3/8	Fully Threaded	ZSB550#12C06
1/2	Fully Threaded	ZSB550#12C08
5/8	Fully Threaded	ZSB550#12C10
3/4	Fully Threaded	ZSB550#12C12
1	Fully Threaded	ZSB550#12C16

12-28 Thread Size

Length	Full or Partially Threaded	Brass Part Number
1/2	Fully Threaded	ZSB550#12F08
3/4	Fully Threaded	ZSB550#12F12
1	Fully Threaded	ZSB550#12F16

Button Head Socket Cap Screw — Inch

Brass | Plain

1/4-20 Thread Size

Length	Full or Partially Threaded	Brass Part Number
3/16	Fully Threaded	ZSB55014C03
1/4	Fully Threaded	ZSB55014C04
5/16	Fully Threaded	ZSB55014C05
7/16	Fully Threaded	ZSB55014C07
9/16	Fully Threaded	ZSB55014C09
7/8	Fully Threaded	ZSB55014C14
1 1/8	Fully Threaded	ZSB55014C18
1 1/4	Fully Threaded	ZSB55014C20
1 3/8	Fully Threaded	ZSB55014C22
1 1/2	Partially Threaded	ZSB55014C24
1 5/8	Partially Threaded	ZSB55014C26
1 3/4	Partially Threaded	ZSB55014C28
1 7/8	Partially Threaded	ZSB55014C30
2	Partially Threaded	ZSB55014C32

1/4-28 Thread Size

Length	Full or Partially Threaded	Brass Part Number
3/16	Fully Threaded	ZSB55014F03
1/4	Fully Threaded	ZSB55014F04
5/16	Fully Threaded	ZSB55014F05
3/8	Fully Threaded	ZSB55014F06
7/16	Fully Threaded	ZSB55014F07
1/2	Fully Threaded	ZSB55014F08
9/16	Fully Threaded	ZSB55014F09
5/8	Fully Threaded	ZSB55014F10
3/4	Fully Threaded	ZSB55014F12
7/8	Fully Threaded	ZSB55014F14
1	Fully Threaded	ZSB55014F16
1 1/8	Fully Threaded	ZSB55014F18
1 1/4	Fully Threaded	ZSB55014F20
1 3/8	Fully Threaded	ZSB55014F22
1 1/2	Partially Threaded	ZSB55014F24
1 5/8	Partially Threaded	ZSB55014F26
1 3/4	Partially Threaded	ZSB55014F28
2	Partially Threaded	ZSB55014F32

5/16-18 Thread Size

Length	Full or Partially Threaded	Brass Part Number
1/4	Fully Threaded	ZSB55051C04
5/16	Fully Threaded	ZSB55051C05
3/8	Fully Threaded	ZSB55051C06
7/16	Fully Threaded	ZSB55051C07
9/16	Fully Threaded	ZSB55051C09
5/8	Fully Threaded	ZSB55051C10
7/8	Fully Threaded	ZSB55051C14
1 1/8	Fully Threaded	ZSB55051C18
1 1/4	Fully Threaded	ZSB55051C20
1 3/8	Fully Threaded	ZSB55051C22
1 1/2	Partially Threaded	ZSB55051C24
1 5/8	Partially Threaded	ZSB55051C26
1 3/4	Partially Threaded	ZSB55051C28
1 7/8	Partially Threaded	ZSB55051C30
2	Partially Threaded	ZSB55051C32

5/16-24 Thread Size

Length	Full or Partially Threaded	Brass Part Number
3/8	Fully Threaded	ZSB55051F06
1/2	Fully Threaded	ZSB55051F08
5/8	Fully Threaded	ZSB55051F10
3/4	Fully Threaded	ZSB55051F12
7/8	Fully Threaded	ZSB55051F14
1	Fully Threaded	ZSB55051F16
1 1/8	Fully Threaded	ZSB55051F18
1 1/4	Fully Threaded	ZSB55051F20
1 3/8	Fully Threaded	ZSB55051F22
1 1/2	Partially Threaded	ZSB55051F24
1 3/4	Partially Threaded	ZSB55051F28
2	Partially Threaded	ZSB55051F32

Button Head Socket Cap Screw — Inch

Brass | Plain

3/8-16 Thread Size

Length	Full or Partially Threaded	Brass Part Number
1/4	Fully Threaded	ZSB55038C04
3/8	Fully Threaded	ZSB55038C06
5/8	Fully Threaded	ZSB55038C10
7/8	Fully Threaded	ZSB55038C14
1 1/8	Fully Threaded	ZSB55038C18
1 1/4	Fully Threaded	ZSB55038C20
1 3/8	Fully Threaded	ZSB55038C22
1 5/8	Partially Threaded	ZSB55038C26
1 3/4	Partially Threaded	ZSB55038C28
1 7/8	Partially Threaded	ZSB55038C30
2	Partially Threaded	ZSB55038C32

1/2-13 Thread Size

Length	Full or Partially Threaded	Brass Part Number
1/2	Fully Threaded	ZSB55012C08
5/8	Fully Threaded	ZSB55012C10
3/4	Fully Threaded	ZSB55012C12
7/8	Fully Threaded	ZSB55012C14
1	Fully Threaded	ZSB55012C16
1 1/8	Fully Threaded	ZSB55012C18
1 1/4	Fully Threaded	ZSB55012C20
1 1/2	Fully Threaded	ZSB55012C24
1 3/4	Fully Threaded	ZSB55012C28
2	Fully Threaded	ZSB55012C32

3/8-24 Thread Size

Length	Full or Partially Threaded	Brass Part Number
3/8	Fully Threaded	ZSB55038F06
1/2	Fully Threaded	ZSB55038F08
5/8	Fully Threaded	ZSB55038F10
3/4	Fully Threaded	ZSB55038F12
1	Fully Threaded	ZSB55038F16
1 1/4	Fully Threaded	ZSB55038F20
1 1/2	Fully Threaded	ZSB55038F24
1 3/4	Partially Threaded	ZSB55038F28
2	Partially Threaded	ZSB55038F32

1/2-20 Thread Size

Length	Full or Partially Threaded	Brass Part Number
3/4	Fully Threaded	ZSB55012F12
7/8	Fully Threaded	ZSB55012F14
1	Fully Threaded	ZSB55012F16
1 1/4	Fully Threaded	ZSB55012F20
1 1/2	Fully Threaded	ZSB55012F24
1 3/4	Fully Threaded	ZSB55012F28
2	Fully Threaded	ZSB55012F32

7/16-14 Thread Size

Length	Full or Partially Threaded	Brass Part Number
3/4	Fully Threaded	ZSB55071C12
1	Fully Threaded	ZSB55071C16
1 1/4	Fully Threaded	ZSB55071C20
1 1/2	Fully Threaded	ZSB55071C24
2	Fully Threaded	ZSB55071C32

5/8-11 Thread Size

Length	Full or Partially Threaded	Brass Part Number
3/4	Fully Threaded	ZSB55058C12
1	Fully Threaded	ZSB55058C16
1 1/4	Fully Threaded	ZSB55058C20
1 1/2	Fully Threaded	ZSB55058C24
1 3/4	Fully Threaded	ZSB55058C28
2	Fully Threaded	ZSB55058C32

Button Head Socket Cap Screw — Metric

Brass | Plain

Dimensions Table — Metric, mm			
Thread Size	Head Diameter (Max. to Min.)	Head Height (Max. to Min.)	Hex Drive Size
M3 x 0.5mm	5.70 - 5.40	1.65 - 1.40	2
M4 x 0.7mm	7.60 - 7.20	2.20 - 2.00	2.5
M5 x 0.8mm	9.50 - 9.10	2.75 - 2.50	3
M6 x 1mm	10.50 - 10.00	3.30 - 3.10	4

M3 x 0.5mm Thread Size

Length	Brass Part Number
5	ZBC3X5BR
6	ZBC3X6BR
8	ZBC3X8BR
10	ZBC3X10BR
12	ZBC3X12BR

M5 x 0.8mm Thread Size

Length	Brass Part Number
8	ZBC5X8BR
10	ZBC5X10BR
12	ZBC5X12BR
16	ZBC5X16BR
20	ZBC5X20BR

M4 x 0.7mm Thread Size

Length	Brass Part Number
6	ZBC4X6BR
8	ZBC4X8BR
10	ZBC4X10BR
12	ZBC4X12BR
16	ZBC4X16BR

M6 x 1mm Thread Size

Length	Brass Part Number
10	ZBC6X10BR
12	ZBC6X12BR
16	ZBC6X16BR
20	ZBC6X20BR
25	ZBC6X25BR

6-Lobe Drive Button Head Machine Screw — Inch

A286 SS | Plain

Product Information

These high-performance fasteners are made from A286 Super Alloy. This stainless steel material is useful for applications requiring high strength and corrosion resistance especially in higher temperature applications. They have a 6-lobe drive that has more points of contact than other drives, allowing you to tighten the screw without damaging the recess. Screws have a Class 2A thread fit. Length is measured from under the head.

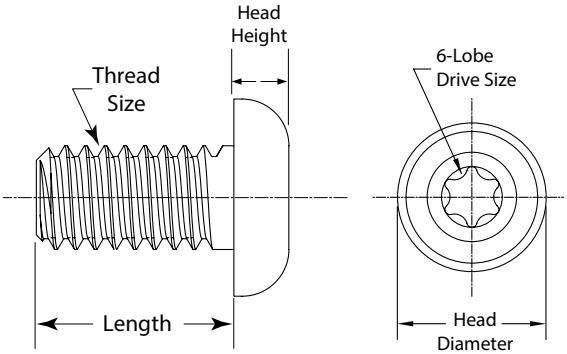

Dimensions Table — Inch

Thread Size	Head Diameter (Max. to Min.)	Head Height (Max. to Min)	Drive Size
4-40	.213 - .201	.059 - .051	T10
6-32	.262 - .250	.073 - .063	T15
8-32	.312 - .298	.087 - .077	T20
10-24	.361 - .347	.101 - .091	T25
10-32	.361 - .347	.101 - .091	T25
1/4-20	.437 - .419	.132 - .122	T30

4-40 Thread Size

Length	A286 SS Part Number
3/16	ZBM105-286
1/4	ZBM106-286
3/8	ZBM108-286
1/2	ZBM110-286
3/4	ZBM113-286

8-32 Thread Size

Length	A286 SS Part Number
1/4	ZBM174-286
3/8	ZBM176-286
1/2	ZBM178-286
3/4	ZBM181-286
1	ZBM183-286

10-32 Thread Size

Length	A286 SS Part Number
1/4	ZBM274-286
3/8	ZBM276-286
1/2	ZBM278-286
3/4	ZBM281-286
1	ZBM283-286

6-32 Thread Size

Length	A286 SS Part Number
1/4	ZBM124-286
3/8	ZBM126-286
1/2	ZBM128-286
3/4	ZBM131-286
1	ZBM133-286

10-24 Thread Size

Length	A286 SS Part Number
1/4	ZBM224-286
3/8	ZBM226-286
1/2	ZBM228-286
3/4	ZBM231-286
1	ZBM233-286

1/4-20 Thread Size

Length	A286 SS Part Number
3/8	ZBM386-286
1/2	ZBM388-286
3/4	ZBM391-286
1	ZBM393-286
1-1/2	ZBM397-286

6-Lobe Drive Button Head Machine Screw — Metric

A286 SS | Plain

Product Information

These high-performance fasteners are made from A286 Super Alloy. This stainless steel material is useful for applications requiring high strength and corrosion resistance especially in higher temperature applications. They have a 6-Lobe drive that has more points of contact than other drives, allowing you to tighten the screw without damaging the recess. Screws have a Class 6g thread fit. Length is measured from under the head.

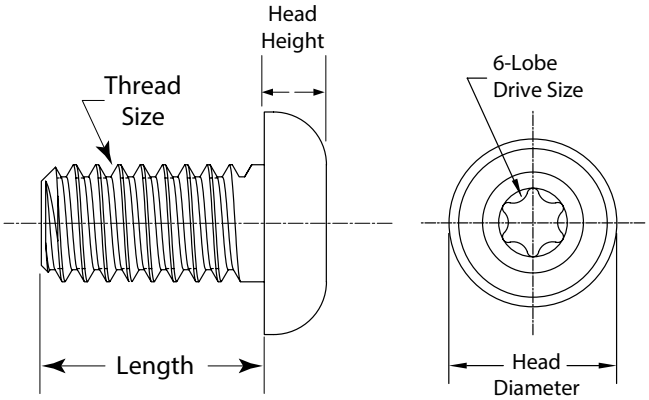

Dimensions Table — Metric, mm			
Thread Size	**Head Diameter** (Max. to Min.)	**Head Height** (Max. to Min)	**Drive Size**
M3 x 0.5mm	5.70 - 5.00	1.65 - 1.40	T10
M4 x 0.7mm	7.60 - 7.20	2.20 - 1.95	T20
M5 x 0.8mm	9.50 - 9.10	2.75 - 2.50	T25
M6 x 1mm	10.50 - 10.10	3.30 - 3.00	T30

M3 x 0.5mm Thread Size

Length	A286 SS Part Number
5	ZBM3X5
6	ZBM3X6
8	ZBM3X8
10	ZBM3X10
12	ZBM3X12

M4 x 0.7mm Thread Size

Length	A286 SS Part Number
6	ZBM4X6
8	ZBM4X8
10	ZBM4X10
12	ZBM4X12
16	ZBM4X16

M5 x 0.8mm Thread Size

Length	A286 SS Part Number
8	ZBM5X8
10	ZBM5X10
12	ZBM5X12
16	ZBM5X16
20	ZBM5X20

M6 x 1mm Thread Size

Length	A286 SS Part Number
10	ZBM6X10
12	ZBM6X12
16	ZBM6X16
20	ZBM6X20
25	ZBM6X25

Left Hand Button Head Machine Screw — Inch

18-8 SS | Plain
316 SS | Plain

Product Information

Tighten these screws by turning them to the left; once fastened, they prevent loosening from counterclockwise motion. These high-performance fasteners are made from 18-8 and 316 stainless steel. 18-8 stainless steel has excellent corrosion resistance and may be mildly magnetic. The 316 stainless steel is our most corrosion resistant stainless steel that withstands solvents and pitting caused by chloride and sulfur. May be mildly magnetic. Screws have a Class 2A thread fit for Inch and a 6g thread fit for Metric and are fully threaded. Length is measured from under the head.

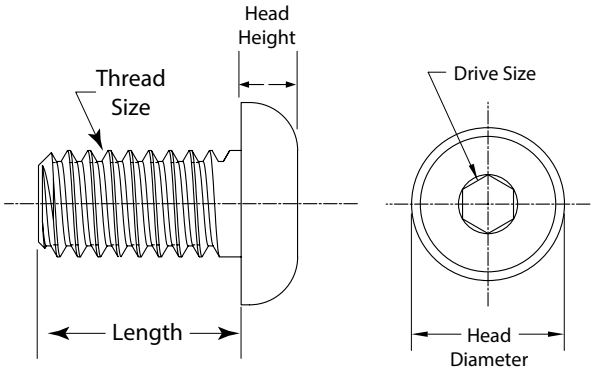

Dimensions Table — Inch

Thread Size	Head Diameter (Max. to Min.)	Head Height (Max. to Min)	Drive Size
4-40	.213 - .201	.059 - .051	1/16
6-32	.262 - .250	.073 - .063	5/64
8-32	.312 - .298	.087 - .077	3/32
10-32	.361 - .347	.101 - .091	1/8
1/4-20	.437 - .419	.132 - .122	5/32

4-40 Thread Size

Length	18-8 SS Part Number	316 SS Part Number
1/4	ZBM106LH	ZBM106-316LH
3/8	ZBM108LH	ZBM108-316LH
1/2	ZBM110LH	ZBM110-316LH
3/4	ZBM113LH	ZBM113-316LH

6-32 Thread Size

Length	18-8 SS Part Number	316 SS Part Number
3/8	ZBM126LH	ZBM126-316LH
1/2	ZBM128LH	ZBM128-316LH
3/4	ZBM131LH	ZBM131-316LH
1	ZBM133LH	ZBM133-316LH

8-32 Thread Size

Length	18-8 SS Part Number	316 SS Part Number
3/8	ZBM176LH	ZBM176-316LH
1/2	ZBM178LH	ZBM178-316LH
3/4	ZBM181LH	ZBM181-316LH
1	ZBM183LH	ZBM183-316LH

10-32 Thread Size

Length	18-8 SS Part Number	316 SS Part Number
3/8	ZBM276LH	ZBM276-316LH
1/2	ZBM278LH	ZBM278-316LH
3/4	ZBM281LH	ZBM281-316LH
1	ZBM283LH	ZBM283-316LH

1/4-20 Thread Size

Length	18-8 SS Part Number	316 SS Part Number
3/8	ZBM386LH	ZBM386-316LH
1/2	ZBM388LH	ZBM388-316LH
3/4	ZBM391LH	ZBM391-316LH
1	ZBM393LH	ZBM393-316LH

Left Hand Button Head Machine Screw — Metric

18-8 SS (A2) | Plain
316 SS (A4) | Plain

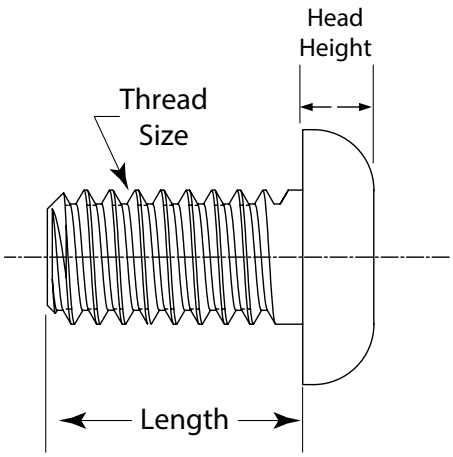

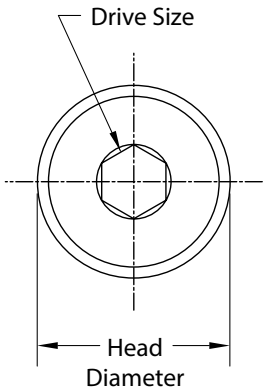

Dimensions Table — Metric

Thread Size	Head Diameter (Max to Min.)	Head Height (Max to Min.)	Drive Size
M3 x 0.50mm	5.70 - 5.40	1.65 - 1.40	2mm
M4 x 0.70mm	7.60 - 7.20	2.20 - 2.00	2.5mm
M5 x 0.80mm	9.50 - 9.10	2.75 - 2.50	3mm
M6 x 1.00mm	10.50 - 10.00	3.30 - 3.10	4mm

M3 x 0.50 Thread Size

Length	18-8 SS Part Number	316 SS Part Number
6	ZBM3X6LH	ZBM3X6-316LH
8	ZBM3X8LH	ZBM3X8-316LH
10	ZBM3X10LH	ZBM3X10-316LH
12	ZBM3X12LH	ZBM3X12-316LH

M4 x 0.70 Thread Size

Length	18-8 SS Part Number	316 SS Part Number
8	ZBM4X8LH	ZBM4X8-316LH
10	ZBM4X10LH	ZBM4X10-316LH
12	ZBM4X12LH	ZBM4X12-316LH
16	ZBM4X16LH	ZBM4X16-316LH

M5 x 0.80 Thread Size

Length	18-8 SS Part Number	316 SS Part Number
10	ZBM5X10LH	ZBM5X10-316LH
12	ZBM5X12LH	ZBM5X12-316LH
16	ZBM5X16LH	ZBM5X16-316LH
20	ZBM5X20LH	ZBM5X20-316LH

M6 x 1.00 Thread Size

Length	18-8 SS Part Number	316 SS Part Number
10	ZBM6X10LH	ZBM6X12-316LH
12	ZBM6X12LH	ZBM6X16-316LH
16	ZBM6X16LH	ZBM6X20-316LH
20	ZBM6X20LH	ZBM6X25-316LH

Fine Thread Button Head Machine Screws — Metric

316 SS (A4) | Plain

Product Information

These high-performance fasteners are made from 316 stainless steel that withstands solvents and pitting caused by chloride and sulfur. DFARS & RoHS Compliant. Manufactured in USA. All screws are fully threaded. Length is measured from under head. May be mildly magnetic. Screws have a 6g thread fit and are fully threaded. Length is measured from under the head.

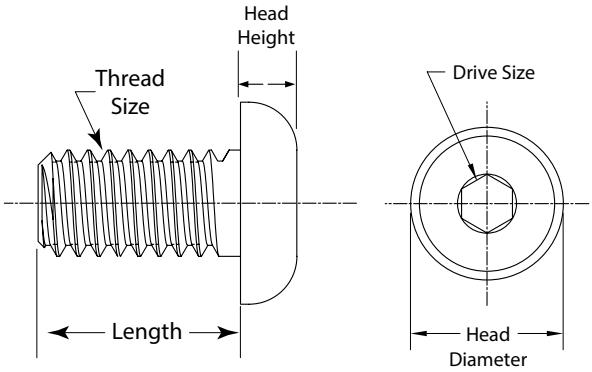

Dimensions Table — Metric			
Thread Size	**Head Diameter** (Max to Min.)	**Head Height** (Max to Min.)	**Drive Size**
M3 x 0.35mm	5.70 - 5.40	1.65 - 1.40	2mm
M4 x 0.50mm	7.60 - 7.20	2.20 - 2.00	2.5mm
M5 x 0.50mm	9.50 - 9.10	2.75 - 2.50	3mm
M6 x 0.75mm	10.50 - 10.00	3.30 - 3.10	4mm

M3 x 0.35 Thread Size

Length	316 SS Part Number
6	ZBM3X6-316F
8	ZBM3X8-316F
10	ZBM3X10-316F
12	ZBM3X12-316F

M4 x 0.50 Thread Size

Length	316 SS Part Number
6	ZBM4X6-316F
8	ZBM4X8-316F
10	ZBM4X10-316F
12	ZBM4X12-316F
16	ZBM4X16-316F

M5 x 0.50 Thread Size

Length	316 SS Part Number
8	ZBM5X8-316F
10	ZBM5X10-316F
12	ZBM5X12-316F
16	ZBM5X16-316F
20	ZBM5X20-316F

M6 x 0.75 Thread Size

Length	316 SS Part Number
10	ZBM6X10-316F
12	ZBM6X12-316F
16	ZBM6X16-316F
20	ZBM6X20-316F
25	ZBM6X25-316F

18-8 SS, Steel

Knurled Low Head Thumb Screws — Inch

MADE IN THE USA

18-8 SS | Plain

Product Information

These fully threaded Knurled Low Head Thumb Screws have a knurled head for slip-resistant controlled adjustment.

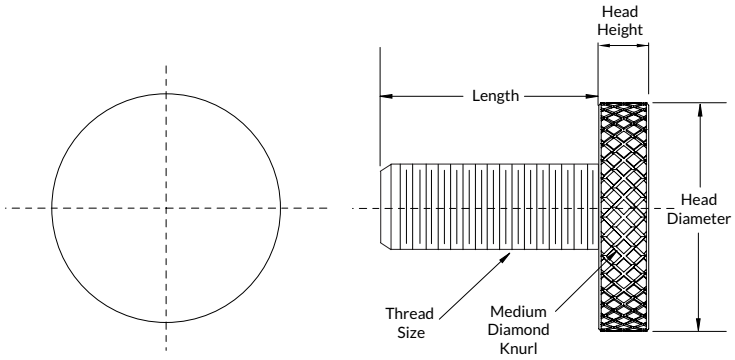

4-40 Thread Size

Length	Head Dia.	Head Height	18-8 SS Part Number
5/16	5/16	3/16	Z2360
3/8	3/8	1/8	Z2361
3/8	3/8	3/16	Z2362
1/2	1/2	3/16	Z2363

4-48 Thread Size

Length	Head Dia.	Head Height	18-8 SS Part Number
5/16	5/16	3/16	Z2395-SS
3/8	5/16	3/16	Z2396-SS

6-32 Thread Size

Length	Head Dia.	Head Height	18-8 SS Part Number
3/8	5/16	3/16	Z2364
1/2	1/4	1/2	Z2365
1/2	5/16	3/16	Z2366
3/8	3/8	3/16	Z2367

6-48 Thread Size

Length	Head Dia.	Head Height	18-8 SS Part Number
3/8	5/16	3/16	Z2398-SS
1/2	5/16	3/16	Z2399-SS

8-32 Thread Size

Length	Head Dia.	Head Height	18-8 SS Part Number
3/8	3/8	3/16	Z2368
1/2	1/2	1/8	Z2369
5/8	5/8	3/16	Z2370
3/4	3/4	3/16	Z2371

8-40 Thread Size

Length	Head Dia.	Head Height	18-8 SS Part Number
3/8	3/8	3/16	Z0765-SS
1/2	3/8	3/16	Z0767-SS
3/4	3/8	3/16	Z0769-SS

10-24 Thread Size

Length	Head Dia.	Head Height	18-8 SS Part Number
3/4	3/8	3/16	Z2372
3/4	1/2	3/16	Z2373
3/4	3/4	3/16	Z2374
1	3/8	3/16	Z2375
1-1/2	3/4	3/16	Z2376
1-1/2	5/8	3/16	Z2377
2	5/8	3/16	Z2378

10-32 Thread Size

Length	Head Dia.	Head Height	18-8 SS Part Number
3/8	7/16	3/16	Z2380
1/2	7/16	3/16	Z2382
5/8	7/16	3/16	Z2383
3/4	7/16	3/16	Z2384
3/4	1/2	3/16	Z2385
3/4	3/4	3/16	Z2386
1	1/2	3/16	Z2387
1-1/4	1/2	3/16	Z2388
1-1/4	3/4	3/16	Z2390
1-1/2	5/8	3/16	Z2392
2	5/8	3/16	Z2394

AMPG ACCURATE MANUFACTURED PRODUCTS GROUP
CERTIFIED COMPANY ISO 9001:2015
MADE IN THE USA

18-8 SS, Steel

Extra Length Thumb Screws — Inch

MADE IN THE USA

18-8 SS | Plain
Steel | Black Oxide

Product Information

These fully threaded extra long threaded Thumb Screws allow for increased reach and adjustability.

10-32 Thread Size

Length	Head Dia.	Head Height	Steel, Black Ox. Part Number
1-1/2	5/8	3/16	Z0670
2	5/8	3/16	Z0671

10-24 Thread Size

Length	Head Dia.	Head Height	Steel, Black Ox. Part Number
1-1/2	5/8	3/16	Z0672

1/4-20 Thread Size

Length	Head Dia.	Head Height	18-8 SS Part Number	Steel, Black Ox. Part Number
1-1/2	11/16	7/32	Z0687	Z0674
2-1/2	11/16	7/32	Z0688	Z0675

1/4-28 Thread Size

Length	Head Dia.	Head Height	18-8 SS Part Number	Steel, Black Ox. Part Number
1-1/2	11/16	7/32	Z0683-SS	Z0683
2-1/2	11/16	7/32	Z0684-SS	Z0684

5/16-18 Thread Size

Length	Head Dia.	Head Height	18-8 SS Part Number	Steel, Black Ox. Part Number
1-3/4	3/4	1/4	Z0689	Z0676
2-1/4	3/4	1/4	Z0690	Z0677
3	3/4	1/4	Z0691	Z0678

5/16-24 Thread Size

Length	Head Dia.	Head Height	18-8 SS Part Number	Steel, Black Ox. Part Number
1-3/4	3/4	1/4	Z0685-SS	Z0685
2-1/4	3/4	1/4	Z0686-SS	Z0686
3	3/4	1/4	Z0696-SS	Z0696

3/8-16 Thread Size

Length	Head Dia.	Head Height	18-8 SS Part Number	Steel Part Number
2	7/8	5/16	Z0692	Z0679
2-1/2	7/8	5/16	Z0693	Z0680
3	7/8	5/16	Z0694	Z0681

3/8-24 Thread Size

Length	Head Dia.	Head Height	18-8 SS Part Number	Steel Part Number
2	7/8	5/16	Z0697-SS	Z0697
3	7/8	5/16	Z0699-SS	Z0699

1/2-13 Thread Size

Length	Head Dia.	Head Height	18-8 SS Part Number	Steel Part Number
3	1	3/8	Z0695	Z0682

1/2-20 Thread Size

Length	Head Dia.	Head Height	18-8 SS Part Number	Steel Part Number
3	1	3/8	Z0708SS	Z0708

18-8 SS, Steel

Dog Point Low Head Thumb Screws — Inch

18-8 SS | Plain

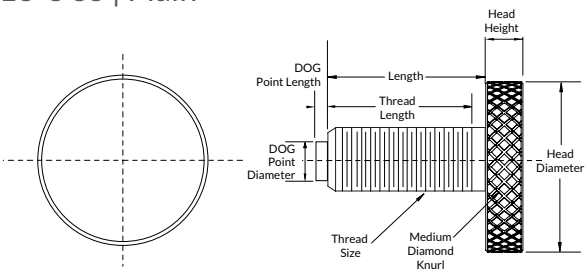

Dimensions Table — Inch

Thread Size	Head Thickness	Head Dia.	Dog Point Diameter	Dog Point Length
10-24	5/16	3/4	.125	.047
1/4-20	5/16	1	.156	.063
5/16-18	3/8	1-1/8	.203	.078
3/8-16	7/16	1-1/4	.250	.094
1/2-13	1/2	1-1/4	.344	.125

10-24 Thread Size

Length	18-8 SS Part Number
1-1/4	Z2180
1-5/8	Z2182

1/4-20 Thread Size

Length	18-8 SS Part Number
1	Z2186
2-1/2	Z2188

5/16-18 Thread Size

Length	18-8 SS Part Number
1-1/2	Z2190
2-1/4	Z2192
2-3/4	Z2194

3/8-16 Thread Size

Length	18-8 SS Part Number
2	Z2196
3	Z2198

1/2-13 Thread Size

Length	18-8 SS Part Number
3-1/2	Z2200

Dog Point Low Head Thumb Screws — Inch

Steel | Case Hardened, Black Oxide

Dimensions Table — Inch

Thread Size	Dog Point Diameter	Dog Point Length
10-32	1/8	1/8
1/4-20	5/32	1/8
5/16-18	13/64	5/32
3/8-16	1/4	3/16

10-32 Thread Size

Length	Head Thickness	Head Diameter	Steel Part Number
1	1/4	3/4	Z2143

1/4-20 Thread Size

Length	Head Thickness	Head Diameter	Steel Part Number
1-1/2	5/16	1	Z2149

5/16-18 Thread Size

Length	Head Thickness	Head Diameter	Steel Part Number
1-1/2	3/8	1-1/8	Z2156

3/8-16 Thread Size

Length	Head Thickness	Head Diameter	Steel Part Number
1-1/2	7/16	1-1/4	Z2165

AMPG ACCURATE MANUFACTURED PRODUCTS GROUP
ISO 9001:2015 CERTIFIED COMPANY
MADE IN THE USA

Shoulder Knurled Thumb Screws with High Heads — Inch

18-8 SS | Plain
Steel | Black Oxide

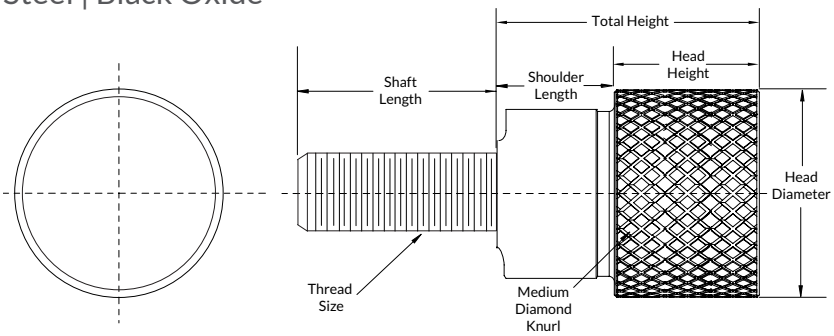

18-8 SS

Steel, Black Oxide

Dimensions Table — Inch

Thread Size	Shoulder Diameter	Shoulder Length
4-40	1/4	3/32
4-48	1/4	3/32
6-32	3/8	3/32
8-32	3/8	3/32
10-32	3/8	3/32
1/4-20	3/8	1/8

4-40 Thread Size

Shaft Length	Head Diameter	Total Height	18-8 SS Part Number	Steel Part Number
1/4	3/8	3/16	Z2300SS	Z2300
3/8	3/8	3/16	Z2301SS	Z2301

4-48 Thread Size

Shaft Length	Head Diameter	Total Height	18-8 SS Part Number	Steel Part Number
1/4	3/8	3/16	Z2302-SS	Z2302
3/8	3/8	3/16	Z2303-SS	Z2303
7/16	3/8	5/16	Z2304-SS	Z2304

6-32 Thread Size

Shaft Length	Head Diameter	Total Height	18-8 SS Part Number	Steel Part Number
7/16	7/16	5/16	Z2305SS	Z2305
9/16	7/16	5/16	Z2307SS	Z2307

8-32 Thread Size

Shaft Length	Head Diameter	Total Height	18-8 SS Part Number	Steel Part Number
5/16	7/16	5/16	Z2312SS	Z2312
3/8	7/16	5/16	Z2313SS	Z2313
7/16	7/16	5/16	Z2314SS	Z2314
1/2	7/16	5/16	Z2315SS	Z2315
9/16	7/16	5/16	Z2316 SS	Z2316
5/16	1/2	5/16	Z2320SS	Z2320
3/8	1/2	5/16	Z2321SS	Z2321
7/16	1/2	5/16	Z2322SS	Z2322
1/2	1/2	5/16	Z2323SS	Z2323
5/8	1/2	5/16	Z2325SS	Z2325

10-32 Thread Size

Shaft Length	Head Diameter	Total Height	18-8 SS Part Number	Steel Part Number
5/16	1/2	5/16	Z2330SS	Z2330
3/8	1/2	5/16	Z2331SS	Z2331
7/16	1/2	5/16	Z2332SS	Z2332
1/2	1/2	5/16	Z2333SS	Z2333
9/16	1/2	5/16	Z2334SS	Z2334
5/8	1/2	5/16	Z2335SS	Z2335

1/4-20 Thread Size

Shaft Length	Head Diameter	Total Height	18-8 SS Part Number	Steel Part Number
1/2	1/2	3/8	Z2340SS	—
5/8	1/2	3/8	Z2342SS	—
1	1/2	3/8	Z2346SS	—

Knurled Low Head Thumb Screws with Shoulders — Inch

18-8 SS | Plain
Steel | Black Oxide

Product Information

Straight knurled thumb screws with a shoulder.

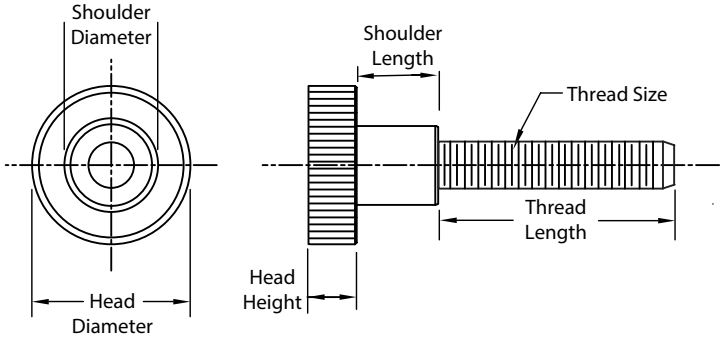

18-8 SS Steel, Black Oxide

Dimensions Table — Inch				
Thread Size	**Head Diameter**	**Head Height**	**Shoulder OD**	**Shoulder Length**
1/4-20	1	1/4	1/2	3/8
1/4-28	1	1/4	1/2	3/8
5/16-18	1-1/4	1/4	5/8	1/2
5/16-24	1-1/4	1/4	5/8	1/2
3/8-16	1-3/8	5/16	3/4	11/16
3/8-24	1-3/8	5/16	3/4	11/16

1/4-20 Thread Size

Length	18-8 SS Part Number	Steel Part Number
5/16	Z1060SS	Z1060
3/8	Z1061SS	Z1061
1/2	Z1062SS	Z1062
5/8	Z1063SS	Z1063
3/4	Z1064SS	Z1064
1	Z1065SS	Z1065

1/4-28 Thread Size

Length	18-8 SS Part Number	Steel Part Number
5/16	Z1066-SS	Z1066
3/8	Z1067-SS	Z1067
1/2	Z1074-SS	Z1074
5/8	Z1075-SS	Z1075
3/4	Z1081-SS	Z1081
1	Z1082-SS	Z1082

5/16-18 Thread Size

Length	18-8 SS Part Number	Steel Part Number
1/2	Z1068SS	Z1068
5/8	Z1069SS	Z1069
3/4	Z1070SS	Z1070
1	Z1071SS	Z1071
1-1/4	Z1072SS	Z1072
1-1/2	Z1073SS	Z1073

5/16-24 Thread Size

Length	18-8 SS Part Number	Steel Part Number
1/2	Z1083-SS	Z1083
5/8	Z1084-SS	Z1084
3/4	Z1096-SS	Z1096
1	Z1097-SS	Z1097
1-1/4	Z1098-SS	Z1098
1-1/2	Z1099-SS	Z1099

3/8-16 Thread Size

Length	18-8 SS Part Number	Steel Part Number
5/8	Z1076SS	Z1076
3/4	Z1077SS	Z1077
1	Z1078SS	Z1078
1-1/4	Z1079SS	Z1079
1-1/2	Z1080SS	Z1080

3/8-24 Thread Size

Length	18-8 SS Part Number	Steel Part Number
5/8	Z2001-SS	Z2001
3/4	Z2002-SS	Z2002
1	Z2003-SS	Z2003
1-1/4	Z2004-SS	Z2004
1-1/2	Z2005-SS	Z2005

Knurled-Type Thumb Screws with High Heads — Inch

Steel | Black Oxide Plated

Product Information

These High Heads Thumb Screws have extra raised head that makes them easy to grip.

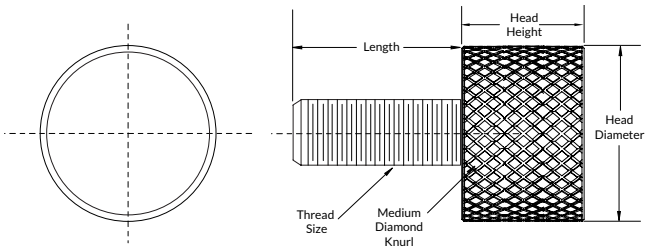

Dimensions Table — Inch

Thread Size	Head Diameter	Head Height
1/4-20	5/8	1/2
5/16-18	3/4	9/16
3/8-16	7/8	11/16
1/2-13	1	1

1/4-20 Thread Size

Length	Steel Part Number
1/2	Z2125
3/4	Z2126

3/8-16 Thread Size

Length	Steel Part Number
3/4	Z2129
1	Z2130

5/16-18 Thread Size

Length	Steel Part Number
3/4	Z2127
1	Z2128

1/2-13 Thread Size

Length	Steel Part Number
3/4	Z2131
1	Z2132

Quarterturn Screws (Latch Bolts) — Inch

18-8 SS | Plain
Steel | Black Oxide

Product Information

The quick release head fits through a slit in a latch or panel to hold it in position.

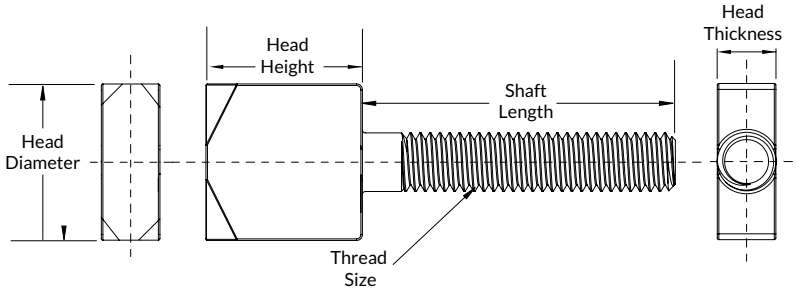

Dimensions Table — Inch

Thread Size	Head Diameter	Head Height	Head Thickness
10-24	1/2	1/2	3/16
10-32	1/2	1/2	3/16
1/4-20	3/4	5/8	1/4
5/16-18	1	3/4	5/16
3/8-16	1	1	3/8
1/2-13	1-1/4	1	1/2

18-8 SS

Steel, Black Oxide

10-24 Thread Size

Shaft Length	18-8 SS Part Number	Steel Part Number
1	Z1085-SS	Z1085

10-32 Thread Size

Shaft Length	18-8 SS Part Number	Steel Part Number
1	Z1086-SS	Z1086
1-1/2	Z1087-SS	Z1087

1/4-20 Thread Size

Shaft Length	18-8 SS Part Number	Steel Part Number
1-1/4	Z1088-SS	Z1088
1-3/4	Z1089-SS	Z1089

5/16-18 Thread Size

Shaft Length	18-8 SS Part Number	Steel Part Number
1-1/2	Z1090-SS	Z1090
2	Z1091-SS	Z1091

3/8-16Thread Size

Shaft Length	18-8 SS Part Number	Steel Part Number
1-1/2	Z1092-SS	Z1092
2	Z1093-SS	Z1093

1/2-13 Thread Size

Shaft Length	18-8 SS Part Number	Steel Part Number
1-3/4	Z1094-SS	Z1094
2-1/4	Z1095-SS	Z1095

Knurled Narrow Head Thumb Screws — Inch

18-8 SS | Plain

Product Information

Extra long head for increased reach and adjustability. Available with or without a slotted head.

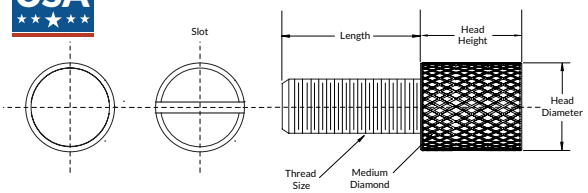

Non-Slotted Head Slotted Head

4-40 Thread Size

Length	Head Height	Head Diameter	No Slot Part Number	Slotted Part Number
3/8	1/8	1/4	Z0730	Z0730SL
1/2	3/8	3/16	Z0732	Z0732SL
3/4	3/8	3/16	Z0734	Z0734SL
1	3/8	3/16	Z0736	Z0736SL
1/2	1/2	1/4	Z0738	Z0738SL
3/4	1/2	1/4	Z0740	Z0740SL
1	1/2	1/4	Z0742	Z0742SL

4-48 Thread Size

Length	Head Height	Head Diameter	No Slot Part Number	Slotted Part Number
1/2	1/2	1/4	Z0739	Z0739SL
3/4	1/2	1/4	Z0741	Z0741SL
1	1/2	1/4	Z0743	Z0743SL

6-32 Thread Size

Length	Head Height	Head Diameter	No Slot Part Number	Slotted Part Number
1/2	3/8	3/16	Z0744	—
3/4	3/8	3/16	Z0746	—
1	3/8	3/16	Z0748	Z0748SL
1/2	1/2	1/4	Z0752	Z0752SL
3/4	1/2	1/4	Z0754	Z0754SL

6-48 Thread Size

Length	Head Height	Head Diameter	No Slot Part Number	Slotted Part Number
1/2	1/2	1/4	Z0756	Z0756SL
3/4	1/2	1/4	Z0757	Z0757SL
1	1/2	1/4	Z0758	Z0758SL

8-32 Thread Size

Length	Head Height	Head Diameter	No Slot Part Number	Slotted Part Number
1/2	3/8	3/16	Z0760	Z0760SL
1	3/8	3/16	Z0762	Z0762SL
1/2	1/2	1/4	Z0764	Z0764SL
1	1/2	1/4	Z0766	Z0766SL

8-40 Thread Size

Length	Head Height	Head Diameter	No Slot Part Number	Slotted Part Number
1/2	1/2	1/4	Z0767	Z0767SL
3/4	1/2	1/4	Z0768	Z0768SL
1	1/2	1/4	Z0769	Z0769SL

10-24 Thread Size

Length	Head Height	Head Diameter	No Slot Part Number	Slotted Part Number
1/2	1/2	1/4	Z0770	Z0770SL
1	1/2	1/4	Z0772	Z0772SL

10-32 Thread Size

Length	Head Height	Head Diameter	No Slot Part Number	Slotted Part Number
1/2	1/2	1/4	Z0774	Z0774SL
1	1/2	1/4	Z0776	Z0776SL

1/4-20 Thread Size

Length	Head Height	Head Diameter	No Slot Part Number	Slotted Part Number
1/2	1/2	5/16	Z0780	Z0780SL
1	1/2	5/16	Z0782	Z0782SL
1-1/2	1/2	5/16	Z0783	Z0783SL

1/4-28 Thread Size

Length	Head Height	Head Diameter	No Slot Part Number	Slotted Part Number
1/2	1/2	5/16	Z0784	Z0784SL
1	1/2	5/16	Z0785	Z0785SL
1-1/2	1/2	5/16	Z0786	Z0786SL

5/16-18 Thread Size

Length	Head Height	Head Diameter	No Slot Part Number	Slotted Part Number
1/2	5/8	3/8	Z0787	Z0787SL
1	5/8	3/8	Z0788	Z0788SL
1-1/2	5/8	3/8	Z0789	Z0789SL

5/16-24 Thread Size

Length	Head Height	Head Diameter	No Slot Part Number	Slotted Part Number
1/2	5/8	3/8	Z0795	Z0795SL
1	5/8	3/8	Z0796	Z0796SL
1-1/2	5/8	3/8	Z0797	Z0797SL

DIN 922 Pan Head Slot Screw with Full Dog Point — Metric

18-SS (A2) | Plain
Steel | Black Oxide Finish

Product Information

With a narrower head than pan head screws, these cheese head screws fit in tight spaces, such as in electrical panels and next to flanges and raised surfaces. A deep slot gives you more driving power and less of a chance of the screwdriver slipping. Length is measured from under the head. Screws with an extended tip, sometimes called a full dog point, fit into a hole or slot to keep parts such as pulleys and gears aligned. Use these screws in place of dowel pins; their threads clamp your parts down and keep them from rotating. When choosing your finish, consider your environment.

ISO 1207 (formerly DIN 84), DIN 920, and DIN 922 screws meet international standards for fastener dimensions. Thread is Coarse Pitch with a Class 6g thread fit.

Dimensions Table — Metric, mm

Thread Size	Head Diameter	Head Height	Tip Diameter	Tip Length
M3 x 0.5	4.00	1.80	2.00	2.50
M4 x 0.7	5.50	2.40	2.80	4.00
M5 x 0.8	6.50	2.70	3.50	4.00
M6 x 1	8.00	3.10	4.50	4.00
M8 x 1.25	10.00	3.80	6.00	6.00
M10 x 1.5	13.00	4.60	7.50	10.00

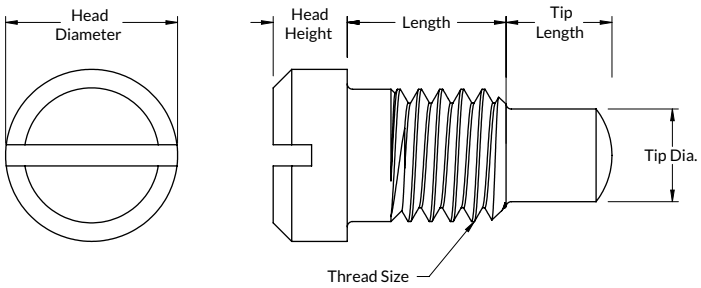

18-8 SS

Steel, Black Oxide

M3 x 0.5mm Thread Size

Length	18-8 SS Part Number	Steel, Black Ox. Part Number
4	SCR151M3X4X2.5SS	SCR151M3X4X2.5-B

M4 x 0.7mm Thread Size

Length	18-8 SS Part Number	Steel, Black Ox. Part Number
6	SCR151M4X6X4SS	SCR151M4X6X4-B

M5 x 0.8mm Thread Size

Length	18-8 SS Part Number	Steel, Black Ox. Part Number
6	SCR151M5X6X4SS	SCR151M5X6X4-B

M6 x 1mm Thread Size

Length	18-8 SS Part Number	Steel, Black Ox. Part Number
10	SCR151M6X10X4SS	SCR151M6X10X4-B

M8 x 1.25mm Thread Size

Length	18-8 SS Part Number	Steel, Black Ox. Part Number
10	SCR151M8X10X6SS	SCR151M8X10X6-B

M10 x 1.5mm Thread Size

Length	18-8 SS Part Number	Steel, Black Ox. Part Number
16	SCR151M10X16X10SS	SCR151M10X16X10-B

DIN 925 Flat Head Slot Screw with Full Dog Point — Metric

Low Carbon Steel | Black Oxide

Product Information

Angled under the head, these metric screws fit in countersunk holes and sit flush with the surface of your part. Length is measured from the top of the head. Screws with an extended tip, sometimes called a full dog point, fit into a hole or slot to keep parts such as pulleys and gears aligned. Use these screws in place of dowel pins; their threads clamp your parts down and keep them from rotating. Head Angle is 90 Degrees with Pan Head Style with Full Dog Point.
Screws with a black-oxide finish have mild corrosion resistance, but only in dry environments. DIN 925 and ISO 2009 (formerly DIN 963) screws meet international standards for fastener dimensions. ISO 2009 and DIN 963 are functionally equivalent with slight differences in head height, diameter, and thread length. Thread is Coarse Pitch with a Class 6g thread fit.

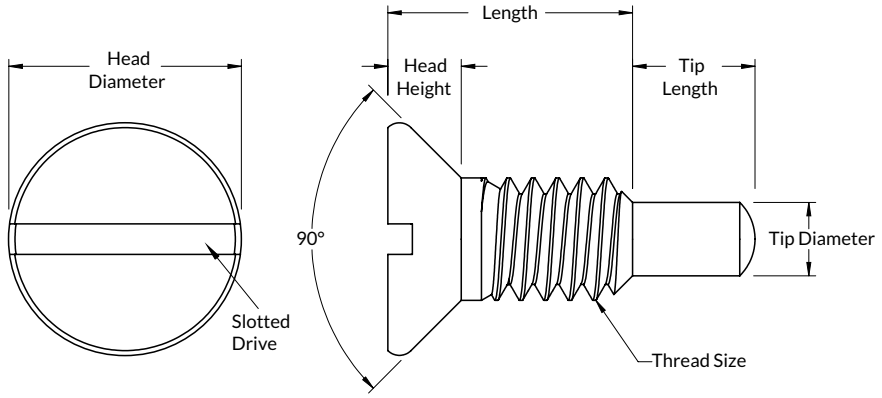

Dimensions Table — Metric, mm				
Thread Size	**Head Diameter**	**Head Height**	**Tip Diameter**	**Tip Length**
M1.4 x 0.3	2.60	.84	.80	1.00
M1.6 x 0.35	3.00	.96	.80	1.60
M2 x 0.4	3.80	1.20	1.20	2.00
M2.5 x 0.45	4.70	1.50	1.50	2.50
M3 x 0.5	5.60	1.65	2.00	2.50

M1.4 x 0.3mm Thread Size

Length	Steel, Black Oxide Part Number
2.5	SCR152M1.4X2.5X1-B

M1.6 x 0.35mm Thread Size

Length	Steel, Black Oxide Part Number
2.5	SCR152M1.6X2.5X1.6-B

M2 x 0.4mm Thread Size

Length	Steel, Black Oxide Part Number
4	SCR152M2X4X2-B

M2.5 x 0.45mm Thread Size

Length	Steel, Black Oxide Part Number
4	SCR152M2.5X4X2.5-B

M3 x 0.5mm Thread Size

Length	Steel, Black Oxide Part Number
6	SCR152M3X6X2.5-B

Non-Sparking Locking Bolt for Drum Ring — Inch

Brass | Plain

Product Information

This brass bolt allows for a lock to be placed in the hole for extra security. The size of the hex prevents the lock from being oriented parallel to the bolt so it cannot be loosened.

5/8-11 Thread Size

For Max. Shackle Diameter	Hex Head Size (across flats)	O'all Length	Brass Part Number
5/16	5/16	4.85	ZDR58-BRASS

Hanger Bolt — Inch

18-8 SS | Plain

Product Information

Use these to Hanger Bolts to hang, mount, and fasten parts to wood structures. Install with a stud driver or create wrench flats by threading two nuts onto the stud and jamming them together.

"A" Thread Length	"A" Thread Size	"B" Screw Thread Length	"B" Screw Thread Size	Length	18-8 SS Part Number
1	1/40-20	1	#14	2	BOL50114C32

"A" Thread Length	"B" Thread Size	"B" Screw Thread Length	"B" Screw Thread Size	Length	18-8 SS Part Number
1-1/2	1/40-20	1-1/2	#14	3	BOL50114C48

"A" Thread Length	"B" Thread Size	"B" Screw Thread Length	"B" Screw Thread Size	Length	18-8 SS Part Number
1-1/2	3/8-16	1-1/2	#24	3	BOL50138C48

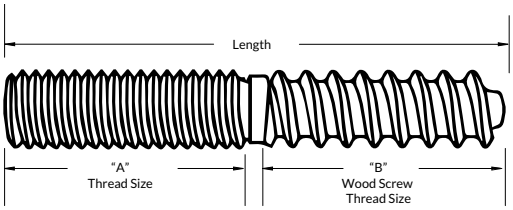

Combo Phillips Pan Head Machine Screws with Pilot Points — Inch

18-8 SS | Plain

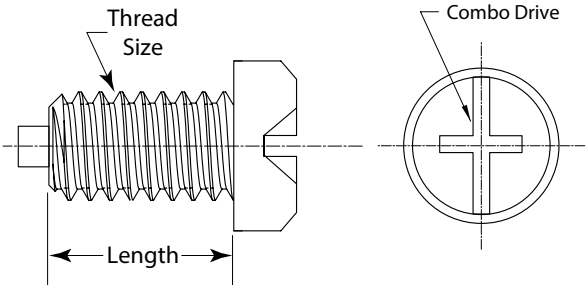

6-32 Thread Size

Length	18-8 SS Part Number
1/2	SCR150P06C08
3/4	SCR150P06C12
1	SCR150P06C16
1-1/4	SCR150P06C20

8-32 Thread Size

Length	18-8 SS Part Number
1/2	SCR150P08C08
3/4	SCR150P08C12
1	SCR150P08C16
1-1/4	SCR150P08C20

10-32 Thread Size

Length	18-8 SS Part Number
1/2	SCR150P10F08
3/4	SCR150P10F12
1	SCR150P10F16
1-1/4	SCR150P10F20

Slotted Pan Head Machine Screws — Inch

4140 Alloy Steel | Thru-Hardened, Black Oxide Finish

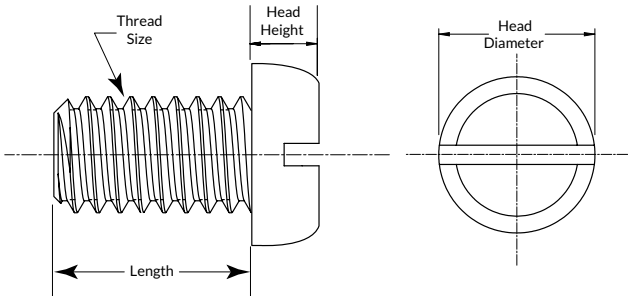

Dimensions Table — Inch

Thread Size	Head Diameter	Head Height
2-56	.155 - .167	.045 - .053
4-40	.205 - .219	.058 - .068
6-32	.256 - .270	.072 - .082
8-32	.306 - .322	.085 - .096
10-24	.357 - .373	.099 - .110
10-32	.357 - .373	.099 - .110
1/4-20	.473 - .492	.130 - .144

2-56 Thread Size

Length	Steel Part Number
1/4	SCR55002
3/8	SCR55004
1/2	SCR55006

4-40 Thread Size

Length	Steel Part Number
1/4	SCR55012
3/8	SCR55014
1/2	SCR55016

6-32 Thread Size

Length	Steel Part Number
1/4	SCR55022
3/8	SCR55024
1/2	SCR55026

8-32 Thread Size

Length	Steel Part Number
3/8	SCR55032
1/2	SCR55034
5/8	SCR55036
3/4	SCR55038

10-24 Thread Size

Length	Steel Part Number
3/8	SCR55050
1/2	SCR55052
5/8	SCR55054
3/4	SCR55056

10-32 Thread Size

Length	Steel Part Number
3/8	SCR55058
1/2	SCR55070
5/8	SCR55072
3/4	SCR55074

1/4-20 Thread Size

Length	Steel Part Number
1/2	SCR55080

Slotted Pan Head Machine Screws with Vent Holes — Inch

18-8 SS | Plain

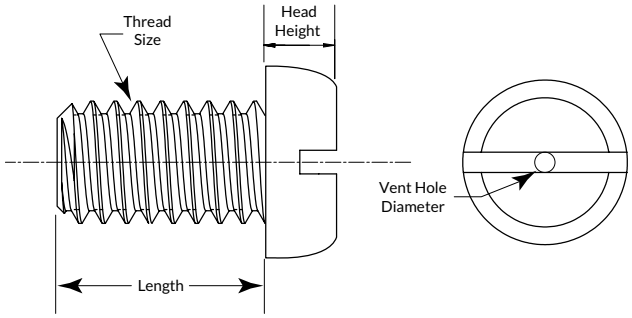

Dimensions Table — Inch

Thread Size	Vent Hole Size
2-56	.028
4-40	.035
6-32	.038
8-32	.042
10-32	.046

2-56 Thread Size

Length	18-8 SS Part Number
1/4	SCR68002
5/16	SCR68004
3/8	SCR68006
1/2	SCR68008

4-40 Thread Size

Length	18-8 SS Part Number
1/4	SCR68012
3/8	SCR68014
1/2	SCR68016
3/4	SCR68018

6-32 Thread Size

Length	18-8 SS Part Number
1/4	SCR68024
3/8	SCR68026
1/2	SCR68028
3/4	SCR68030

8-32 Thread Size

Length	18-8 SS Part Number
1/4	SCR68038
3/8	SCR68040
1/2	SCR68042
3/4	SCR68044

10-32 Thread Size

Length	18-8 SS Part Number
1/4	SCR68060
3/8	SCR68062
1/2	SCR68064
3/4	SCR68066
1	SCR68068

T Slot Bolts — Inch

18-8 SS | Plain

Product Information

Used in machine tables with a T Slot, these 18-8 Stainless Steel T Slot Bolts are corrosion resistant. Heads are designed to fit in the T Slot and will not twist or jam. Coarse threads.

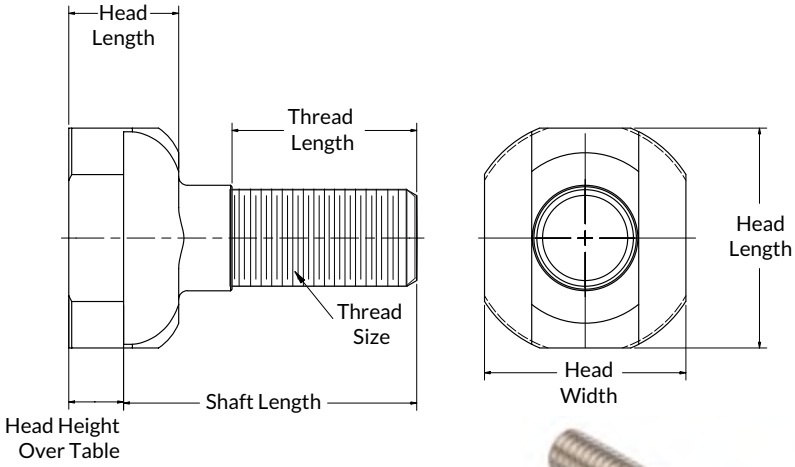

Dimensions Table — Inch

Thread Size	Fits Table Slot	Head Height Over Table	Head Width	Head Length
3/8-16	**3/8**	3/16	11/16	3/4
1/2-13	**1/2**	9/32	7/8	1-1/8
5/8-11	**5/8**	11/32	1-3/32	1-5/16
3/4-10	**3/4**	7/16	1-1/4	1-1/2

3/8-16 Thread Size

Shaft Length	Thread Length	18-8 SS Part Number
1	5/8	Z1400
1-1/4	7/8	Z1401
1-1/2	1-1/8	Z1402
2	1-1/2	Z1403
2-1/2	1-1/2	Z1404

1/2-13 Thread Size

Shaft Length	Thread Length	18-8 SS Part Number
1-1/4	3/4	Z1405
1-1/2	1	Z1406
1-3/4	1-1/4	Z1407
2	1-1/2	Z1408
2-1/4	1-1/2	Z1409
2-1/2	1-1/2	Z1410
3	1-1/2	Z1411
3-1/2	2	Z1412
4	2	Z1413

5/8-11 Thread Size

Shaft Length	Thread Length	18-8 SS Part Number
2	1-1/2	Z1414
2-1/2	1-1/2	Z1415
3	1-1/2	Z1416
3-1/2	2	Z1417
4	2	Z1418
6	2	Z1419

3/4-10 Thread Size

Shaft Length	Thread Length	18-8 SS Part Number
4	2	Z1420
4-1/2	2	Z1421
5	2	Z1422
5-1/2	2	Z1423
6	2	Z1424
7	2	Z1245

Longevity

Since 1987, Accurate Manufactured Products Group (AMPG) has been a stocking manufacturer of precision components, hard-to-find fasteners and industrial products.

Strategic Location

AMPG's 163,000 square foot facility is located in the Heart of the Midwest which gives us access to high-quality machinists/employees as well as being strategically located for fast delivery.

Advanced Equipment

Our manufacturing facility operates 24/7, producing precision parts on state-of-the-art CNC Swiss Lathes. Parts are made from high quality materials with a superior machined finish.

Superior Quality

Our advanced electronic Quality Control systems are employed on the manufacturing floor to catch trends before bad parts are produced.

Visit us online at ampg.com or email sales@ampg.com

8090 Woodland Drive
Indianapolis, IN 46278

p: 317.472.9000
f: 317.472.9010

AMPG

ACCURATE
MANUFACTURED
PRODUCTS
GROUP

MADE IN THE USA

Visit us online at ampg.com or email sales@ampg.com

8090 Woodland Drive
Indianapolis, IN 46278

p: 317.472.9000
f: 317.472.9010

Follow Us On Social Media

@AMPG.USA

@AMPG_USA

@ampg_design

@AMPG

Copyright © 2026 Accurate Manufactured Products Group, All Rights Reserved, AMPG, inc.